Scrambler 1200 XC, Scrambler 1200 XE and Scrambler 1200 Steve McQueen Edition

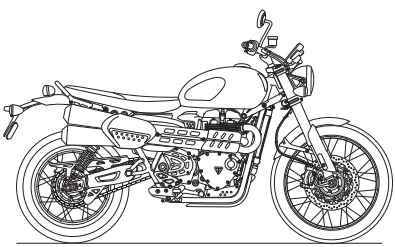

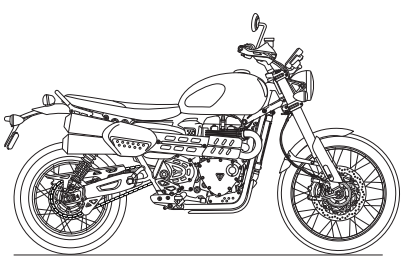

This handbook contains information on the Triumph Scrambler 1200 XC, Scrambler 1200 XE and Scrambler 1200 Steve McQueen Edition motorcycles. Always store this Owner's Handbook with the motorcycle and refer to it for information whenever necessary.

The information contained in this publication is based on the latest information available at the time of printing. Triumph reserves the right to make changes at any time without prior notice, or obligation.

Not to be reproduced wholly or in part without the written permission of Triumph Motorcycles Limited.

© Copyright 02.2022 Triumph Motorcycles Limited, Hinckley, Leicestershire, England.

Publication part number 3850238-EN issue 1

CONTENTS

This handbook contains a number of different sections. The table of contents below will help you find the beginning of each section where, in the case of the major sections, a further table of contents will help you find the specific subject required.

03 FOREWORD

07 SAFETY FIRST

14 WARNING LABEL LOCATIONS

16 PARTS IDENTIFICATION

18 RIDER VIEW PARTS IDENTIFICATION

19 SERIAL NUMBERS

21 GENERAL INFORMATION

91 HOW TO RIDE THE MOTORCYCLE

103 ACCESSORIES, LOADING AND PASSENGERS

107 MAINTENANCE AND ADJUSTMENT

161 CLEANING AND STORAGE

173 WARRANTY

185 SPECIFICATIONS - SCRAMBLER 1200 XC AND XE

191 SPECIFICATIONS - SCRAMBLER STEVE MCQUEEN EDITION

197 INDEX

202 APPROVAL INFORMATION

Warnings, Cautions and Notes

Throughout this Owner's Handbook particularly important information is presented in the following form:

Warning

This warning symbol identifies special instructions or procedures, which if not correctly followed could result in personal injury, or loss of life.

Caution

This caution symbol identifies special instructions or procedures, which, if not strictly observed, could result in damage to, or destruction of, equipment.

Note

This note symbol indicates points of particular interest for more efficient and convenient operation.

Warning Labels

At certain areas of the motorcycle, the symbol (above) can be seen. The symbol means 'CAUTION: REFER TO THE HANDBOOK' and will be followed by a pictorial representation of the subject concerned.

Never attempt to ride the motorcycle or make any adjustments without reference to the relevant instructions contained in this handbook.

For the location of all labels showing this symbol, see the Warning Label Locations section. Where necessary, this symbol will also appear on the pages containing the relevant information.

Maintenance

To ensure a long, safe and trouble free life for your motorcycle, maintenance should only be carried out by an authorised Triumph dealer.

Only an authorised Triumph dealer will have the necessary knowledge, equipment and skills to maintain your Triumph motorcycle correctly.

To locate your nearest authorised Triumph dealer, visit the Triumph web site at www.triumph.co.uk or telephone the authorised distributor in your country. Their address is given in the service record book that accompanies this handbook.

Noise Control System

Tampering with the noise control system is prohibited.

Owners are warned that the law may prohibit:

1. The removal or rendering inoperative by any person other than for purposes of maintenance, repair or replacement, of any device or element of design incorporated into any new vehicle for the purpose of noise control prior to its sale or delivery to the ultimate purchaser or while it is in use and,
2. the use of the vehicle after such device or element of design has been removed or rendered inoperative by any person.

Among those acts presumed to constitute tampering are the acts listed below:

- Removal of, or puncturing the muffler, baffles, header pipes or any other component which conducts exhaust gases.
- Removal of, or puncturing of any part of the intake system.
- Lack of proper maintenance.
- Replacing any moving parts of the vehicle, or parts of the exhaust or intake system, with parts other than those specified by the manufacturer.

Owner's Handbook

Warning

This Owner's Handbook, and all other instructions that are supplied with your motorcycle, should be considered a permanent part of your motorcycle and should remain with it even if your motorcycle is subsequently sold.

All riders must read this Owner's Handbook and all other instructions which are supplied with your motorcycle, before riding, in order to become thoroughly familiar with the correct operation of your motorcycle's controls, its features, capabilities and limitations.

Do not lend your motorcycle to others as riding when not familiar with your motorcycle's controls, features, capabilities and limitations can lead to an accident.

Thank you for choosing a Triumph motorcycle. This motorcycle is the product of Triumph's use of proven engineering, exhaustive testing, and continuous striving for superior reliability, safety and performance.

Please read this Owner's Handbook before riding in order to become thoroughly familiar with the correct operation of your motorcycle's controls, its features, capabilities and limitations.

This Owner's Handbook includes safe riding tips, but does not contain all the techniques and skills necessary to ride a motorcycle safely.

Triumph strongly recommends that all riders undertake the necessary training to ensure safe operation of this motorcycle.

This Owner's Handbook is available from your local dealer in:

- English
- US English
- Arabic
- Chinese
- Dutch
- French
- German
- Italian
- Japanese
- Portuguese
- Spanish
- Swedish
- Thai
- Finnish (available online from www.triumphmotorcycles.com).

The languages available for this Owner's Handbook are dependent on the specific motorcycle model and country.

Talk to Triumph

Our relationship with you does not end with the purchase of your Triumph. Your feedback on the buying and ownership experience is very important in helping us develop our products and services for you.

Please help us by ensuring your authorised Triumph dealership has your email address and registers this with us. You will then receive an online customer satisfaction survey invitation to your email address where you can give us this feedback.

Your Triumph Team.

This page intentionally left blank

The Motorcycle

Warning

This motorcycle is designed for use as a two-wheeled vehicle capable of carrying a rider on his/her own, or a rider and one passenger (subject to a passenger seat and footrests being fitted).

The total weight of the rider, and any passenger, accessories and luggage must not exceed the maximum load limit as stated in the Specifications section.

Warning

This motorcycle is not designed to tow a trailer or be fitted with a sidecar.

Fitting a sidecar and/or a trailer may result in loss of control and an accident.

Warning

This motorcycle is designed for on-road and moderate off-road use. Moderate off-road use includes use on unpaved, dirt or gravel roads, but does not include riding on any motocross course, any off-road competition (such as motocross or enduro riding), or riding off-road with a passenger.

Extreme off-road use could lead to loss of motorcycle control and an accident.

Warning

Riding the motorcycle off-road may result in loosening of the spokes.

Make sure that the spokes are checked before and after riding the motorcycle off-road. Tighten any loose spokes and check for wheel rim damage.

Spokes that are loose may affect handling and stability resulting in motorcycle damage, loss of motorcycle control and an accident.

Warning

Check the wheel rims and spokes regularly for wear and damage.

Check spoke tension at all intervals listed in the maintenance schedule. Tighten any loose spokes.

Incorrectly tightened spokes may affect handling and stability resulting in motorcycle damage, loss of motorcycle control and an accident.

Caution

Riding the motorcycle in extreme conditions such as wet and muddy roads, on rough terrain or in dusty and humid environments, may lead to above average wear and damage of certain components.

Therefore the servicing and replacement of worn or damaged components may be necessary before the scheduled maintenance service is reached.

It is important that the motorcycle is inspected after riding in extreme conditions and any worn or damaged components are serviced or replaced.

Fuel and Exhaust Fumes

Warning

PETROL IS HIGHLY FLAMMABLE:

Always turn off the engine when refuelling.

Do not refuel or open the fuel filler cap while smoking or in the vicinity of any open (naked) flame.

Take care not to spill any petrol on the engine, exhaust pipes or silencers when refuelling.

If petrol is swallowed, inhaled or allowed to get into the eyes, seek immediate medical attention.

Spillage on the skin should be immediately washed off with soap and water and clothing contaminated with petrol should immediately be removed.

Burns and other serious skin conditions may result from contact with petrol.

Warning

Never start the engine or run the engine in a confined area.

Exhaust fumes are poisonous and can cause loss of consciousness and death within a short period of time.

Always operate the motorcycle in the open air or in an area with adequate ventilation.

Helmet and Clothing

Warning

When riding the motorcycle, both rider and passenger (on models where carrying a passenger is permitted) must always wear appropriate clothing including a motorcycle helmet, eye protection, gloves, boots, trousers (close fitting around the knee and ankle) and a brightly coloured jacket.

During off-road use (on models suitable for off-road use), the rider must always wear appropriate clothing including trousers and boots.

Brightly coloured clothing will considerably increase a rider's (or passenger's) visibility to other operators of road vehicles.

Although full protection is not possible, wearing correct protective clothing can reduce the risk of injury when riding.

⚠ Warning

A helmet is one of the most important pieces of riding gear as it offers protection against head injuries. You and your passenger's helmet should be carefully chosen and should fit you or your passenger's head comfortably and securely. A brightly coloured helmet will increase a rider's (or passenger's) visibility to other operators of road vehicles.

An open face helmet offers some protection in an accident though a full face helmet will offer more.

Always wear a visor or approved goggles to help vision and to protect your eyes.

Parking

⚠ Warning

Always switch off the engine and remove the ignition key before leaving the motorcycle unattended. By removing the key, the risk of use of the motorcycle by unauthorised or untrained persons is reduced.

When parking the motorcycle, always remember the following:

- Engage first gear to help prevent the motorcycle from rolling off the stand.

- The engine and exhaust system will be hot after riding. DO NOT park where pedestrians, animals and/or children are likely to touch the motorcycle.

- Do not park on soft ground or on a steeply inclined surface. Parking under these conditions may cause the motorcycle to fall over.

For further details, please refer to the 'How to Ride the Motorcycle' section of this Owner's Handbook.

Parts and Accessories

Warning

Owners should be aware that the only approved parts, accessories and conversions for any Triumph motorcycle are those which carry official Triumph approval and are fitted to the motorcycle by an authorised dealer.

In particular, it is extremely hazardous to fit or replace parts or accessories whose fitting requires the dismantling of, or addition to, either the electrical or fuel systems and any such modification could cause a safety hazard.

The fitting of any non-approved parts, accessories or conversions may adversely affect the handling, stability or other aspect of the motorcycle operation that may result in an accident causing injury or death.

Triumph does not accept any liability whatsoever for defects caused by the fitting of non-approved parts, accessories or conversions or the fitting of any approved parts, accessories or conversions by non-approved personnel.

Maintenance and Equipment

Warning

Consult your authorised Triumph dealer whenever there is doubt as to the correct or safe operation of this Triumph motorcycle.

Remember that continued operation of an incorrectly performing motorcycle may aggravate a fault and may also compromise safety.

Warning

Make sure all equipment that is required by law is installed and functioning correctly.

The removal or alteration of the motorcycle's lights, silencers, emission or noise control systems can violate the law.

Incorrect or improper modification may adversely affect the handling, stability or other aspect of the motorcycle operation, which may result in an accident causing injury or death.

Warning

If the motorcycle is involved in an accident, collision or fall, it must be taken to an authorised Triumph dealer for inspection and repair.

Any accident can cause damage to the motorcycle that, if not correctly repaired, may cause a second accident that may result in injury or death.

Riding

Warning

Never ride the motorcycle when fatigued or under the influence of alcohol or other drugs.

Riding when under the influence of alcohol or other drugs is illegal.

Riding when fatigued or under the influence of alcohol or other drugs reduces the rider's ability to maintain control of the motorcycle and may lead to loss of control and an accident.

Warning

All riders must be licenced to operate the motorcycle.

Operation of the motorcycle without a licence is illegal and could lead to prosecution.

Operation of the motorcycle without formal training in the correct riding techniques that are necessary to become licenced is dangerous and may lead to loss of motorcycle control and an accident.

Warning

Always ride defensively and wear the protective equipment mentioned elsewhere in this foreword.

Remember, in an accident, a motorcycle does not give the same impact protection as a car.

Warning

This Triumph motorcycle should be operated within the legal speed limits for the particular road travelled.

Operating a motorcycle at high speeds can be potentially dangerous since the time available to react to given traffic situations is greatly reduced as road speed increases.

Always reduce speed in potentially hazardous driving conditions such as bad weather or heavy traffic.

Warning

Continually observe and react to changes in road surface, traffic and wind conditions. All two-wheeled vehicles are subject to external forces which may cause an accident. These forces include but are not limited to:

- Wind draft from passing vehicles
- Potholes, uneven or damaged road surfaces
- Bad weather
- Rider error.

Always operate the motorcycle at moderate speed and away from heavy traffic until you have become thoroughly familiar with its handling and operating characteristics. Never exceed the legal speed limit.

Wobble/Weave

A weave is a relatively slow oscillation of the rear of the motorcycle, while a wobble is a rapid, possibly strong shaking of the handlebar. These are related but distinct stability problems usually caused by excessive weight in the wrong place, or by a mechanical problem such as worn or loose bearings or under-inflated or unevenly worn tires.

Your solution to both situations is the same. Keep a firm hold on the handlebars without locking arms or fighting the steering. Smoothly ease off the throttle to slow gradually. Do not apply the brakes, and do not accelerate to try to stop the wobble or weave. In some cases, it helps to shift your body weight forward by leaning over the tank.

Copyright © 2005 Motorcycle Safety Foundation. All rights reserved. Used with permission.

Handlebars and Footrests

Warning

The rider must maintain control of the motorcycle by keeping hands on the handlebars at all times.

The handling and stability of a motorcycle will be adversely affected if the rider removes their hands from the handlebars, resulting in loss of motorcycle control and an accident.

Warning

The rider and passenger (if applicable) must always use the footrests provided, during operation of the motorcycle.

By using the footrests, both rider and passenger will reduce the risk of inadvertent contact with any motorcycle components and will also reduce the risk of injury from entrapment of clothing.

Warning

The bank angle indicators must not be used as a guide to how far the motorcycle may be safely banked.

This depends on many various conditions including, but not limited to, road surface, tyre condition and weather. Banking to an unsafe angle may cause instability, loss of motorcycle control and an accident.

Warning

When banking and the bank angle indicator, attached to the rider's footrest, makes contact with the ground, the motorcycle is nearing its bank angle limit. A further increase of the banking angle is unsafe.

The maximum wear limit is shown by a groove on the bank angle indicator.

Banking to an unsafe angle may cause instability, loss of motorcycle control and an accident.

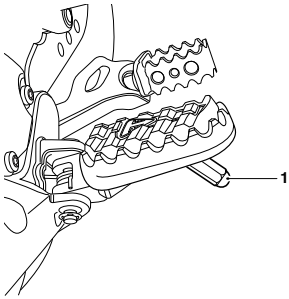

1. Bank angle indicator

Warning

Use of a motorcycle with bank angle indicators worn beyond the maximum limit will allow the motorcycle to be banked to an unsafe angle. Therefore, always replace the bank angle indicators before they are worn to their maximum limit.

Banking to an unsafe angle may cause instability, loss of motorcycle control and an accident.

Details of the bank angle wear limits can be found in the Maintenance and Adjustment section.

WARNING LABEL LOCATIONS

Warning Label Locations

The labels detailed on this and the following pages draw your attention to important safety information in this handbook. Before riding, make sure that all riders have understood and complied with all the information to which these labels relate.

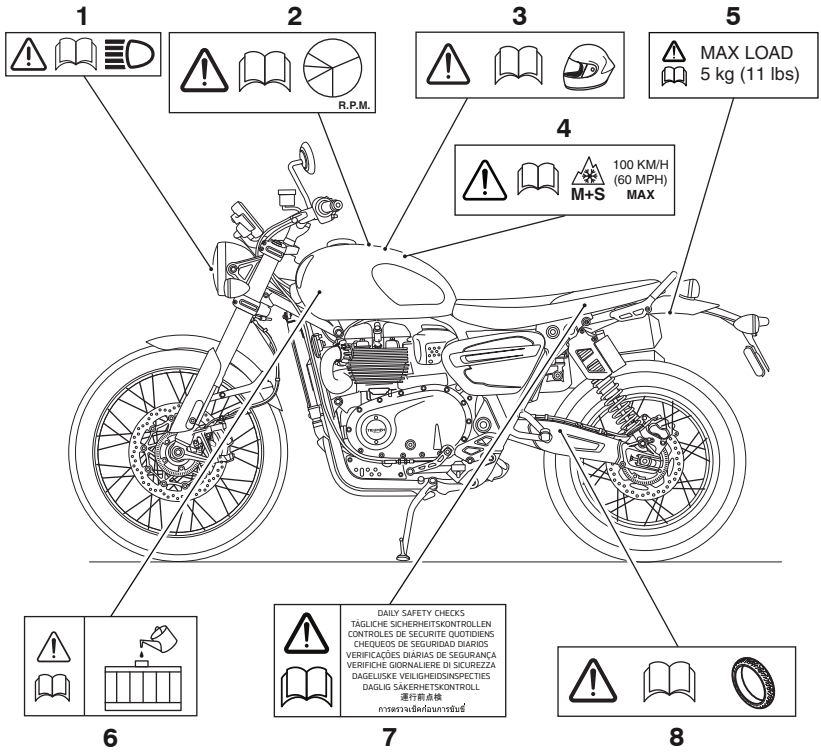

1. **Headlight (page 158)**
2. **Running-In (page 89)**
3. **Helmet (page 08)**
4. **Mud and Snow Tyres (page 187)**
5. **Panniers (if fitted) (page 103)**
6. **Coolant (page 118)**
7. **Daily Safety Checks (page 90)**
8. **Tyres (page 146)**

Warning Label Locations (continued)

Caution

All warning labels and decals, with the exception of the Running-in label, are fitted to the motorcycle using a strong adhesive. In some cases, labels are installed prior to an application of paint lacquer. Therefore, any attempt to remove the warning labels will cause damage to the paintwork or bodywork.

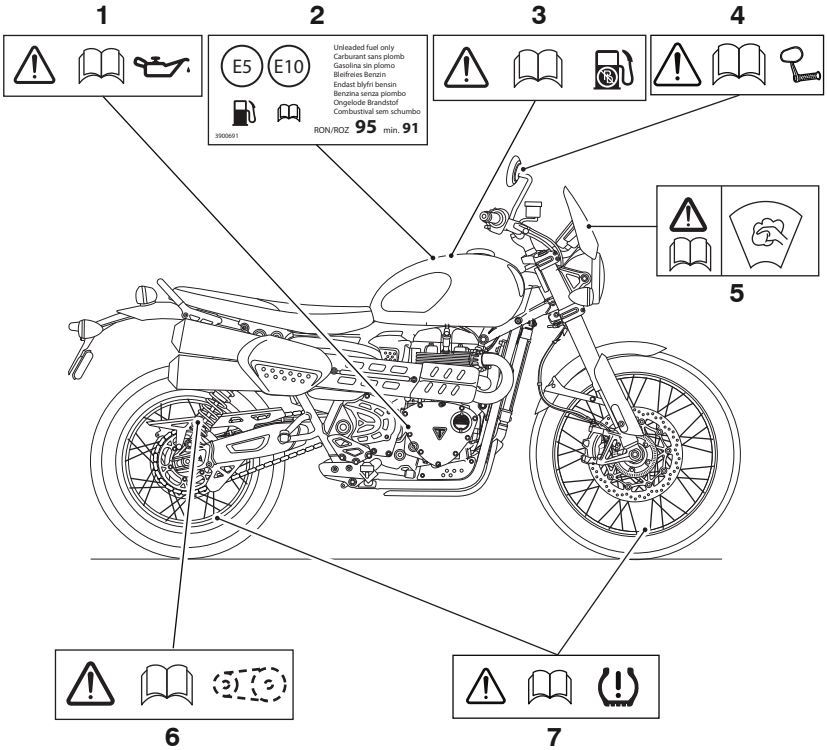

1. Engine Oil (page 114)
2. E5 and E10 Fuel (if fitted) (page 80)
3. Unleaded Fuel (page 80)
4. Mirrors (page 135)
5. Windscreen (if fitted) (page 168)
6. Drive Chain (page 124)
7. Tyre Pressure Monitoring System (if fitted) (page 73)

PARTS IDENTIFICATION

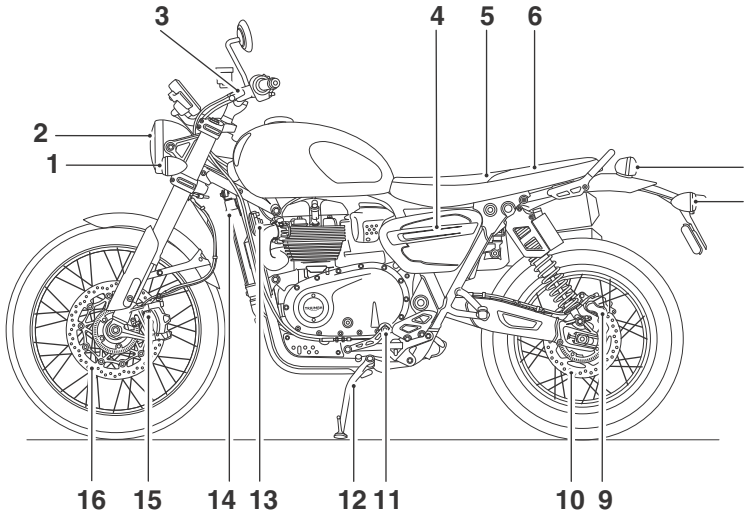

1. Front direction indicator
2. Headlight
3. Clutch lever
4. Adjustment tool (behind side panel)
5. Battery (under seat)
6. Owner's Handbook (under seat)
7. Brake/rear light
8. Rear direction indicator
9. Rear brake caliper
10. Rear brake disc
11. Gear change pedal
12. Side stand
13. Horn
14. Radiator
15. Front brake caliper
16. Front brake disc

Parts Identification - Continued

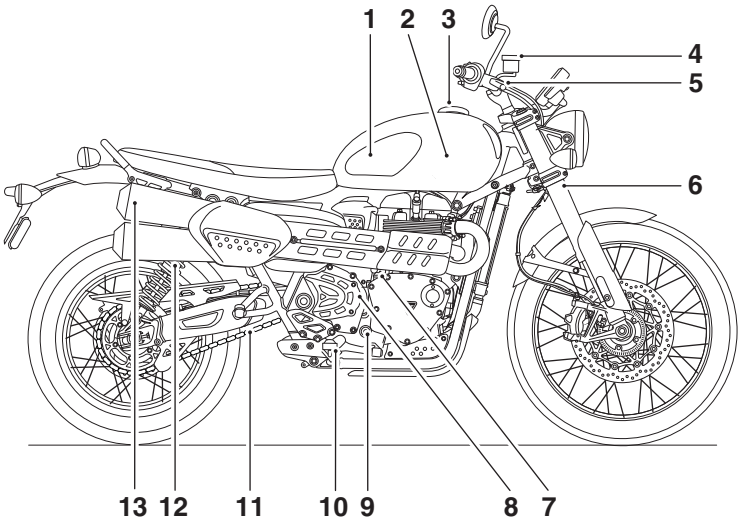

1. Fuel tank
2. Coolant pressure cap (under fuel tank)
3. Fuel filler cap
4. Front brake fluid reservoir
5. Front brake lever
6. Front fork
7. Oil filler plug
8. Rear brake fluid reservoir (behind cover)
9. Oil level sight glass
10. Rear brake pedal
11. Drive chain
12. Rear suspension unit
13. Silencer

RIDER VIEW PARTS IDENTIFICATION

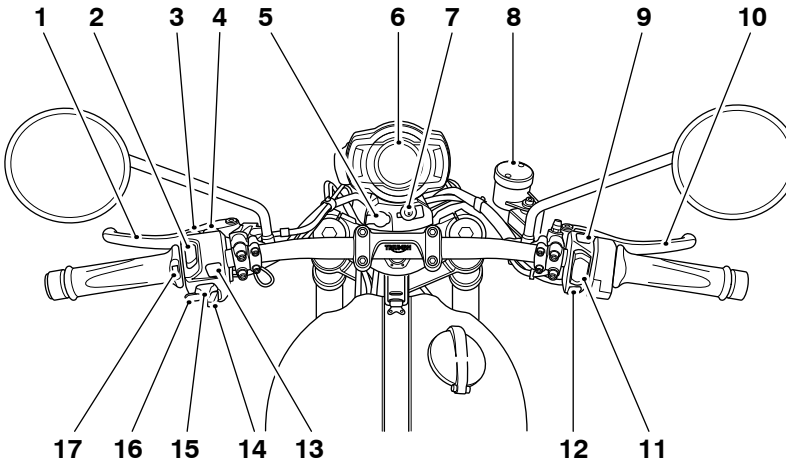

1. Clutch lever
2. Daytime Running Lights (DRL) switch (if fitted)
3. Cruise control button
4. Front fog lights switch (if fitted) and high beam button
5. Accessory socket
6. Instrument display screen
7. Steering lock
8. Front brake fluid reservoir
9. Hazard button
10. Front brake lever
11. Engine start/stop switch
12. HOME button
13. MODE button
14. Joystick button
15. Direction indicator switch
16. Horn button
17. Heated grips switch (if fitted)

Vehicle Identification Number (VIN)

The vehicle identification number is stamped into the steering head area of the frame. It is also shown on a label located next to it.

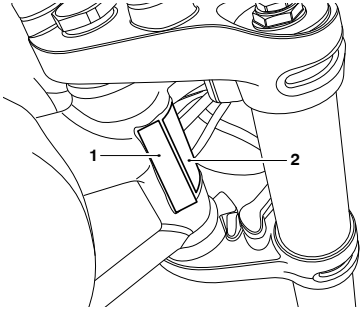

1. **VIN stamp**
2. **VIN label**

Record the vehicle identification number in the space provided below.

Engine Serial Number

The engine serial number is stamped on the upper engine crankcase, towards the rear, and is visible from the right hand side, behind the starter motor.

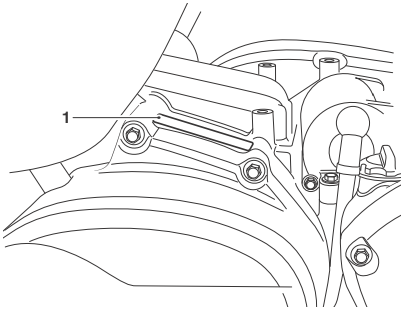

1. **Engine serial number**

Record the engine serial number in the space provided below.

This page intentionally left blank

Table of Contents

Instruments 23
Instruments Panel Layout 24
Warning Lights 26
Speedometer and Odometer 30
Tachometer 30
Fuel Gauge 30
Gear Position Display 31
Riding Modes 32
Riding Mode Selection 32
Information Tray 35
Main Menu 42
Instrument Panel Position Adjustment 58
Keys 59
Smart Key 59
Smart Key Battery Replacement 60
Standard Key 61
Keyless Ignition 61
Master Ignition Switch (if fitted) 62
Steering Lock 63
Right Handlebar Switches 63
Hazard Warning Lights Button 63
Power ON/OFF Position 64
STOP Position 64
RUN Position 64
QUICK START Position 64
HOME Button 64
Left Handlebar Switches 65
Daytime Running Lights (DRL) Switch (if fitted) 65
MODE Button 65
Direction Indicators Switch 66
Joystick Button 66
Horn Button 66
Heated Grips Switch (if fitted) 67
Fog Lights Switch 67
Cruise Control Button (if fitted) 67
High Beam Button 68

Cruise Control 68
Activating Cruise Control 69
Deactivating Cruise Control 70
Traction Control (TC) 70
Optimised Cornering Traction Control (if fitted) 71
Traction Control Settings 72
ABS Enable 72
Tyre Pressure Monitoring System (TPMS) (if fitted) 73
Tyre Pressure Sensor Serial Number 74
TPMS System Display 75
Sensor Batteries 75
TPMS System Fault 76
Tyre Pressures 76
Replacement Tyres 76
Front Brake Lever 77
Clutch Lever 78
Throttle Control 79
Fuel 80
Fuel Tank Cap 82
Filling the Fuel Tank 82
Side Stand 83
Centre Stand (if fitted) 84
Side Panels 85
Tool Kit 85
Seats 86
Seat Care 86
Seat Lock 86
Seat Removal and Installation 87
Seat Storage 87
Universal Serial Bus (USB) Socket 88
Running-In 89
Daily Safety Checks 90

Instruments

Table of Contents

Instruments Panel Layout 24
Warning Lights 26
Speedometer and Odometer 30
Tachometer 30
Fuel Gauge 30
Gear Position Display 31
Riding Modes 32
Riding Mode Selection 32
Information Tray 35
Main Menu 42
Instrument Panel Position Adjustment 58

Instruments Panel Layout

There are two different themes available on the instrument display. Not all instrument features are available on all models.

Quartz Theme

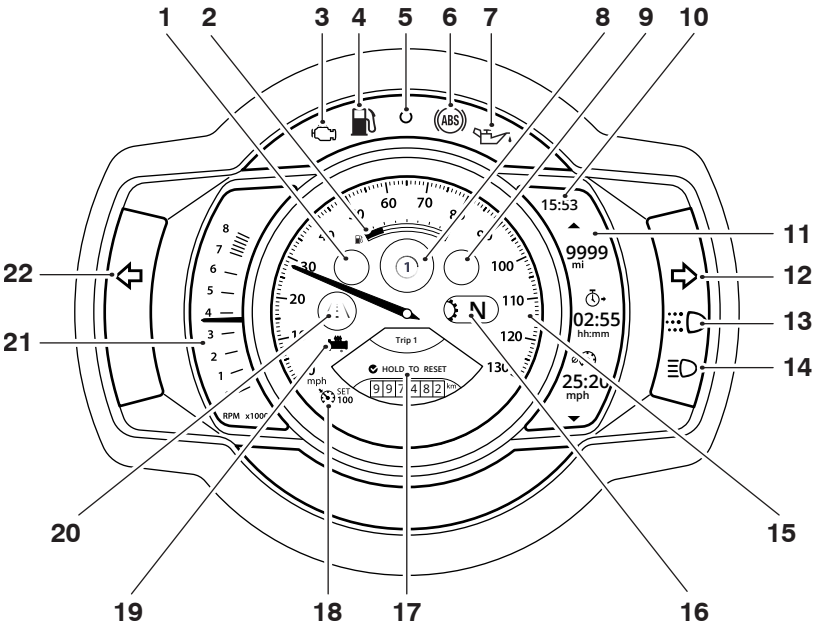

1. Warning light
2. Fuel gauge
3. Engine management Malfunction Indicator Light (MIL)
4. Fuel level low warning light
5. Alarm/immobiliser status indicator light (alarm is an accessory kit)
6. ABS warning light
7. Oil pressure warning light
8. Information tray symbol/Riding mode symbol
9. Warning light
10. Clock
11. Right hand side display panel
12. Right hand indicator
13. Daytime Running Light (DRL) (if fitted)
14. High beam warning light
15. Speedometer
16. Gear position symbol
17. Information tray
18. Cruise control SET indicator
19. Heated grips status
20. Current riding mode
21. Tachometer/Left hand side display panel
22. Left hand indicator

Chronos Theme

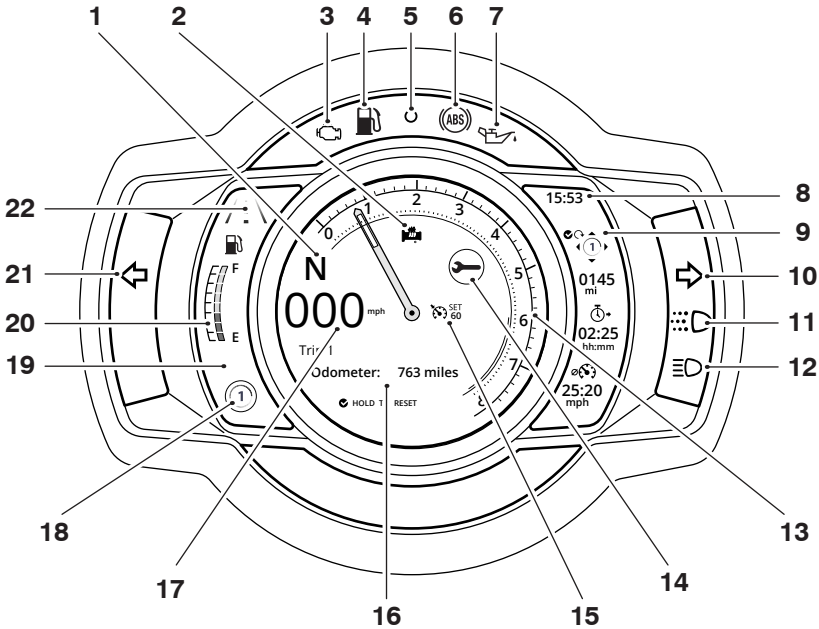

1. Gear position symbol
2. Heated grips status
3. Engine management Malfunction Indicator Light (MIL)
4. Fuel level low warning light
5. Alarm/immobiliser status indicator light (alarm is an accessory kit)
6. ABS warning light
7. Oil pressure warning light
8. Clock
9. Right hand side display panel
10. Right hand indicator
11. Daytime Running Light (DRL) (if fitted)
12. High beam warning light
13. Tachometer
14. Warning light
15. Cruise control speed/SET indicator
16. Information tray
17. Speedometer
18. Information tray symbol
19. Left hand panel
20. Fuel gauge
21. Left hand indicator
22. Current riding mode

Warning Lights

When the ignition is switched on, the instrument warning lights will illuminate for 1.5 seconds and will then go off (except those which remain on until the engine starts, as described in the following pages).

For additional warning and information messages, see page 36.

Engine Management System Malfunction Indicator Light (MIL)

The Malfunction Indicator Light (MIL) for the engine management system illuminates when the ignition is switched ON (to indicate that it is working) but should not become illuminated when the engine is running.

If the engine is running and there is a fault with the engine management system the MIL will be illuminated and the general warning symbol will flash. In such circumstances, the engine management system may switch to 'limp-home' mode so that the journey may be completed, if the fault is not so severe that the engine will not run. If the MIL flashes when the ignition is switched ON contact an authorised Triumph dealer as soon as possible to have the situation rectified. In these circumstances the engine will not start.

Warning

Reduce speed and do not continue to ride for longer than is necessary with the MIL illuminated. The fault may adversely affect engine performance, exhaust emissions and fuel consumption.

Reduced engine performance could cause a dangerous riding condition, leading to loss of control and an accident.

Contact an authorised Triumph dealer as soon as possible to have the fault checked and rectified.

Low Oil Pressure Warning Light

With the engine running, if the engine oil pressure becomes dangerously low, the low oil pressure warning light will illuminate. The low oil pressure warning light will also illuminate if the ignition is switched ON without running the engine.

Caution

Stop the engine immediately if the low oil pressure warning light illuminates. Do not restart the engine until the fault has been rectified.

Severe engine damage will result from running the engine when the low oil pressure warning light is illuminated.

Immobiliser/Alarm Indicator Light

This Triumph motorcycle is fitted with an engine immobiliser which is activated when the ignition switch is turned to the OFF position.

Without Alarm Fitted

When the ignition switch is turned to the OFF position, the immobiliser light will flash on and off for 24 hours to show that the engine immobiliser is on. When the ignition switch is turned to the ON position the immobiliser and the indicator light will be off.

If the indicator light remains on it indicates that the immobiliser has a malfunction that requires investigation. Contact an authorised Triumph dealer as soon as possible to have the fault checked and rectified.

With Alarm Fitted

The immobiliser/alarm light will only illuminate when the conditions described in the genuine Triumph accessory alarm instructions are met.

Anti-lock Braking System (ABS) Warning Light

When the ignition switch is turned to the ON position, it is normal that the ABS warning light will flash on and off. The light will continue to flash after engine start-up until the motorcycle first reaches a speed exceeding 6 mph (10 km/h) when it will go off.

The warning light will not illuminate again until the engine is restarted unless there is a fault, or the ABS is disabled by the rider.

If the ABS is disabled by the rider the warning light will illuminate until the ABS is enabled again.

If there is a fault with the ABS system the warning light will be illuminated and the general warning symbol will flash.

Traction control will not function if there is a malfunction with the ABS. The warning lights for the ABS, traction control and the MIL will be illuminated.

Warning

If the ABS is not functioning, the brake system will continue to function as a non-ABS equipped brake system.

Do not continue to ride for longer than is necessary with the warning light illuminated.

Contact an authorised Triumph dealer as soon as possible to have the fault checked and rectified. In this situation braking too hard will cause the wheels to lock resulting in loss of motorcycle control and an accident.

Traction Control (TC) Indicator Light

The Traction Control (TC) indicator light is used to indicate that the traction control system is active and is working to limit rear wheel slip during periods of hard acceleration or under wet or slippery road conditions. Traction control will not function if there is a malfunction with the ABS. The warning lights for the ABS, traction control and the MIL will be illuminated.

Warning

If the traction control is not functioning, care must be taken when accelerating and cornering on wet/slippery road surfaces to avoid rear wheel spin.

Do not continue to ride for longer than is necessary with the engine management system Malfunction Indicator Light (MIL) and traction control warning lights illuminated. Contact an authorised Triumph dealer as soon as possible to have the fault checked.

Hard acceleration and cornering in this situation may cause the rear wheel to spin resulting in loss of motorcycle control and an accident.

If traction control is switched on:

- Under normal riding conditions the TC indicator light will remain off.
- The TC indicator light will flash rapidly when the traction control system is working to limit rear wheel slip during periods of hard acceleration or under wet or slippery road conditions.

If traction control is switched off:

- The TC indicator light will not illuminate. Instead the TC disabled warning light will be illuminated.

Traction Control (TC) Disabled Warning Light

The TC disabled warning light should not illuminate unless traction control is switched off or there is a malfunction.

If the warning light becomes illuminated while riding, it indicates that the traction control system has a malfunction that requires investigation.

Direction Indicators

When the direction indicator switch is turned to the left or right, the direction indicator warning light will flash on and off at the same speed as the direction indicators.

Hazard Warning Lights

To turn the hazard warning lights on or off, press and release the hazard warning light switch.

The ignition must be switched ON for the hazard warning lights to function.

The hazard warning lights will remain on if the ignition is switched OFF, until the hazard warning light switch is pressed again.

High Beam Light

When the high beam button is pressed the high beam will be switched on. Each press of the button will swap between dip and high beam.

If daytime running lights are fitted to the motorcycle, the high beam button has additional functionality.

If the DRL switch is in the daytime running lights position, then press and hold the high beam button to turn the high beam on. It will remain on as long as the button is held in and will turn off as soon as the button is released.

A lighting on/off switch is not fitted to this model. The rear light and licence plate light all function automatically when the ignition is on.

The headlight will function when the ignition is on. The headlight will go off while pressing the starter button until the engine starts.

Daytime Running Lights (DRL) (if fitted)

When the ignition is switched ON and the daytime running lights switch is set to Daytime Running Lights, the daytime running lights warning light will illuminate. During daylight hours, the Daytime Running Lights (DRL) improve the visibility of the motorcycle to other road users. Low beam headlights must be used in any other conditions unless the road conditions allow for high beam headlights to be used.

The daytime running lights and low beam headlights are operated manually using a switch on the left hand switch housing, see page 29.

Warning

Do not ride for longer than necessary in poor ambient light conditions with the Daytime Running Lights (DRL) in use.

Riding with the Daytime Running Lights when dark, in tunnels or where poor ambient light is apparent may reduce the riders vision or dazzle other road users.

Dazzling other road users or reduced vision in low ambient light levels may result in loss of motorcycle control and an accident.

Low Fuel Warning Light

The low fuel warning light will illuminate when there are approximately 3.5 litres of fuel remaining in the tank.

General Warning Symbol

The general warning symbol will be shown in the information tray if an ABS or engine management fault has occurred and the ABS and/or MIL warning lights are illuminated. Contact an authorised Triumph dealer as soon as possible to have the fault checked and rectified.

Speedometer and Odometer

The speedometer indicates the road speed of the motorcycle.

The odometer shows the total distance that the motorcycle has travelled.

Tachometer

Caution

Never allow engine speed to enter the red zone as severe engine damage may result.

The tachometer shows the engine speed in revolutions per minute - rpm (r/min). At the end of the tachometer range there is the red zone.

Engine speeds in the red zone are above maximum recommended engine speed and are also above the range for best performance.

Fuel Gauge

The fuel gauge indicates the amount of fuel in the tank.

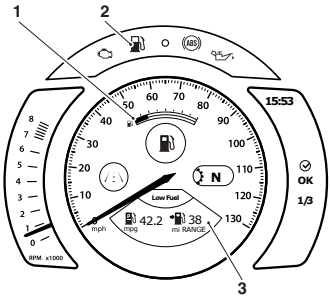

1. **Fuel gauge**
2. **Low fuel warning light**
3. **Low fuel information tray**

Note

The fuel gauge is shown in the left hand panel when the Chronos theme is selected.

The range to empty and instantaneous fuel consumption is shown in the right hand panel when the Fuel menu is selected.

With the ignition switched on, a filled line in the fuel gauge indicates the fuel remaining in the fuel tank.

The gauge markings indicate intermediate fuel levels between an empty and full fuel tank.

The low fuel warning light will illuminate when approximately 3.5 litres of fuel is remaining in the tank and you should refuel at the earliest opportunity.

A low fuel warning message will appear in the information tray. Press the joystick centre to acknowledge and hide the low fuel warning.

After refuelling, the fuel gauge and range to empty information will be updated only while riding the motorcycle. Depending on the riding style, updating could take up to five minutes.

Gear Position Display

The gear position display indicates which gear (one to six) has been engaged. When the transmission is in neutral (no gear selected), the display will show N.

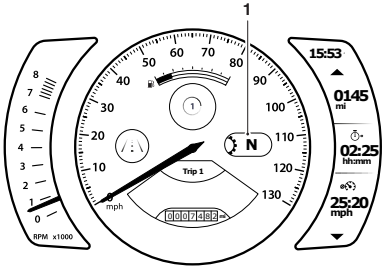

1. **Gear position display (neutral position shown)**

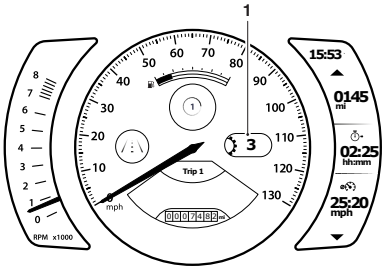

1. **Gear position display (third gear shown)**

Riding Modes

The riding modes allow adjustment of the throttle response (MAP), Anti-lock Brake System (ABS) and Traction Control (TC) settings to suit differing road conditions and rider preferences. Up to six riding modes are available depending on the motorcycle model's specification.

Riding modes can be conveniently selected using the MODE button and joystick located on the left hand switch housing, whilst the motorcycle is stationary or moving.

Each riding mode is adjustable. Availability of the ABS, MAP and TC setting options vary between models. For more information, see page 44. If a riding mode is edited (other than the Rider mode), the icon will change as shown below.

Default Icon	Rider Edited Icon	Description
	-	Rider
		Rain
		Road
		Sport
		Off-Road
PRO	PRO	Off-Road Pro

Riding Mode Selection

Warning

The selection of riding modes whilst the motorcycle is in motion requires the rider to allow the motorcycle to coast (motorcycle moving, engine running, throttle closed, clutch lever pulled in and no brakes applied) for a brief period of time.

Riding mode selection whilst the motorcycle is in motion should only be attempted:

- At low speed
- In traffic free areas
- On straight and level roads or surfaces
- In good road and weather conditions
- Where it is safe to allow the motorcycle to briefly coast.

Riding mode selection whilst the motorcycle is in motion MUST NOT be attempted:

- At high speeds
- Whilst riding in traffic
- During cornering or on winding roads or surfaces
- On steeply inclined roads or surfaces
- In poor road/weather conditions
- Where it is unsafe to allow the motorcycle to coast.

Failure to observe this important warning will lead to loss of motorcycle control and an accident.

Warning

If traction control has been disabled in the Main Menu as described on page 48 then settings saved for all riding modes will be overridden.

Traction control will remain off regardless of your riding mode selection until re-enabled, or the ignition has been switched off then on again, or the MODE button is held in to return to the default Road mode (which enables the traction control when the motorcycle is next stationary).

If the traction control is disabled, the motorcycle will handle as normal but without traction control. In this situation accelerating too hard on wet/slippery road surfaces may cause the rear wheel to slip, and may result in loss of motorcycle control and an accident.

Warning

If the ABS is disabled, the brake system will function as a non-ABS braking system.

In this situation braking too hard will cause the wheels to lock, and may result in loss of motorcycle control and an accident.

Warning

After selecting a riding mode, operate the motorcycle in an area free from traffic to gain familiarity with the new settings.

Do not loan your motorcycle to anyone as they may change the riding mode settings from the one you are familiar with, causing loss of motorcycle control and an accident.

If when the ignition was last switched OFF, the following conditions were met:

- Off-Road, Off-Road Pro or Rider mode was active,
- and ABS or TC was set to Off-Road or OFF,

then the riding mode will default to Road when the ignition is switched ON.

Otherwise, the last selected riding mode will be remembered and activated when the ignition is switched ON. If the mode icons are not shown when the ignition switch is in the ON position, make sure that the engine stop switch is in the RUN position.

To select a riding mode:

- Press and release the MODE button on the left hand switch housing to activate the riding mode information tray and riding mode selection panel.
- The currently active riding mode icon is shown in the centre of the instrument panel.

To change the selected riding mode:

- Either push the joystick left or right, or repeatedly press the MODE button until the required mode is shown in the centre of the display screen or highlighted in the riding mode selection panel.
- A brief press of the joystick centre will select the required riding mode.

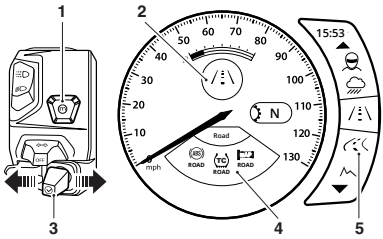

1. **MODE button**
2. **Current riding mode**
3. **Joystick**
4. **Information tray showing riding mode settings**
5. **Riding mode selection panel**

- Push the joystick left/right or press the MODE button to scroll through the riding mode options in the following order:
  - Rider
  - Rain
  - Road
  - Sport
  - Off-road
  - Off-road pro.

The selected mode is activated once the following conditions for switching modes have been met:

Motorcycle Stationary - Engine Off

- The ignition is switched ON.
- The engine stop switch is in the RUN position.

Motorcycle Stationary - Engine Running

- Neutral gear is selected.

Motorcycle in Motion

Within 30 seconds of selecting a riding mode the rider must carry out the following simultaneously:

- Close the throttle.
- Make sure that the brakes are not engaged (allow the motorcycle to coast).

It is not possible to switch into or out of Off-Road, Off-Road Pro or Rider modes whilst the motorcycle is in motion, if the ABS or TC settings are set to Off-road or OFF in either of those modes. In this case, the motorcycle must be brought to a stop before the riding mode change can take place.

If a riding mode change is not completed, the icon will alternate between the previous riding mode and the newly selected riding mode until the change is complete or it is cancelled.

The riding mode selection is now complete and normal riding can be resumed.

Information Tray

Warning

When the motorcycle is in motion, only attempt to switch between the information tray modes or reset the fuel information under the following conditions:

- At low speed

- In traffic free areas

- On straight and level roads or surfaces

- In good road and weather conditions.

Failure to observe this important warning could lead to loss of motorcycle control and an accident.

The information tray appears at the bottom of the display screen and allows easy access to different motorcycle status information.

To access the information tray, any warning messages must first be acknowledged, see page 36.

To view the different information tray items:

- Push the joystick left/right until the required information tray item is shown.

The information tray contains the following items:

- Warnings and Information Messages, see page 36
- Contrast, see page 36
- Theme Options, see page 37
- Detail, see page 37
- Trip Meter, see page 38
- Fuel Information, see page 39
- Coolant Temperature, see page 40
- Service Interval Announcement and Odometer, see page 41
- Tyre Pressure Monitoring System (TPMS) (if fitted), see page 41.

Different information tray items can be shown or hidden from the information tray. For further information, refer to page 52.

Warnings and Messages

Any warnings and information messages are shown in the information tray. An example is shown below.

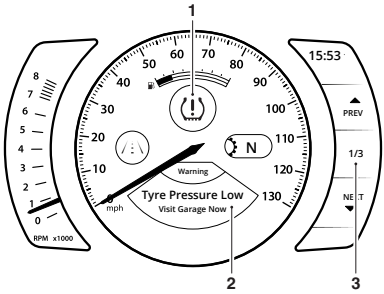

1. **Warning symbol (TPMS shown)**
2. **Warning and/or message description**
3. **Warning and/or message counter**

To view the warnings and messages:

- Push the joystick left/right to scroll through the options until the warning review is shown.
- Push the joystick down/up to review each warning (if more than one). The warning counter will show the amount of warnings that are present.
- Push the joystick left/right to return to the information tray.

Low Battery Warning

If items such as heated grips are fitted and are on with the engine at idle, over a period of time, the battery voltage may drop below a predetermined voltage and a warning message will be shown in the information tray.

Contrast

The Contrast information tray menu allows the display screen contrast to be adjusted. However, do not cover the light sensor in the left hand panel on the display screen, as this will stop the screen contrast from working correctly.

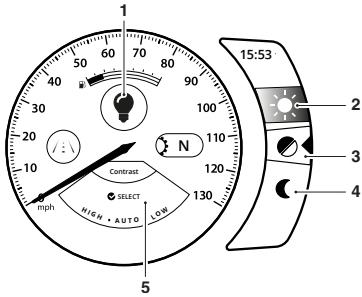

1. **Contrast symbol**
2. **HIGH contrast**
3. **AUTO contrast**
4. **LOW contrast**
5. **Contrast information tray**

There are three options available:

- **HIGH** - This option locks the display screen to the white background version of each display screen style for maximum visibility.
- **AUTO** - This option uses the instrument light sensor to adjust the contrast to the most suitable setting. In bright sunlight, low brightness settings will be overridden to make sure that the instruments can be viewed at all times.
- **LOW** - This option locks the display screen to the dark background version of each display screen for night time visibility.

To select an option:

- Push the joystick down/up to select either the HIGH, AUTO or LOW contrast option and press the joystick centre to confirm.
- If the rider defined brightness setting is suitable this will be used, see page 52.

Themes

The Theme options information tray menu allows a different theme to be applied to the display screen.

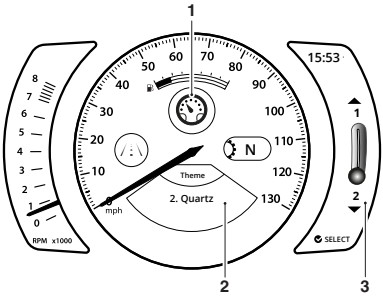

1. **Theme symbol**
2. **Theme information tray**
3. **Theme slider bar**

To change the theme:

- Push the joystick down/up to select the required theme and then press the joystick centre to confirm.
- A slider bar in the right hand side panel also indicates the choice of theme.

Detail

The Detail information tray menu allows the level of detail to be shown or hidden in the display screen.

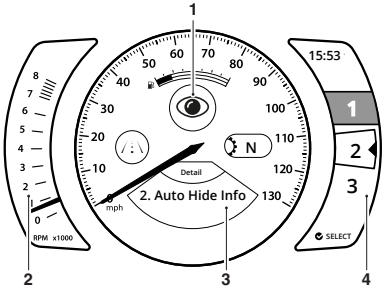

1. **Detail symbol**
2. **Left hand panel**
3. **Information tray**
4. **Right hand panel**

There are three options available:

- **Auto Hide All** - This option hides all information in the left hand panel, right hand panel and the information tray.
- **Auto Hide Info** - This option hides all information in the left hand panel and right hand panel. Information will still be shown in the information tray.
- **Show All** - This option shows information in the left hand panel, right hand panel and the information tray.

To select an option:

- Push the joystick down/up to select the required Detail option.
- There is a short time delay when using the joystick to select the option, and the option then being hidden or shown in the display screen. Make sure that the joystick isn't held whilst the option is waiting to appear or hide the information. If the joystick is pressed, the information then reappears until the next option is selected.
- Once the required Detail option is chosen, press the joystick centre to confirm.
- The Detail options are also numbered and shown in the right hand side display panel.

Trip Meters

There are two trip meters that can be accessed and reset in the information tray. Trip 2 meter can be shown or hidden from the information tray. For more information, see page 50.

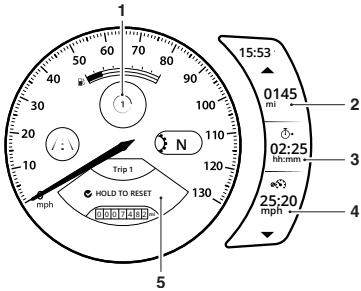

1. **Trip symbol**
2. **Distance travelled**
3. **Time taken**
4. **Average speed**
5. **Trip information tray**

To view a specific trip meter:

- Push the joystick left/right to scroll through the information tray items until Trip 1 meter is shown.
- Select Trip 1 or Trip 2 by pushing the joystick down/up.

To reset a trip meter:

- Select the trip meter to be reset.
- Press and hold the joystick centre for more than one second.
- The trip meter will then be reset.

The trip meter can also be reset from the Main menu, see page 49.

Fuel

The Fuel status information tray shows fuel consumption information.

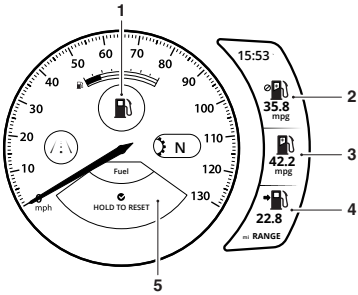

1. **Fuel symbol**
2. **Average fuel consumption**
3. **Instantaneous fuel consumption**
4. **Range to empty**
5. **Fuel information tray**

Average Fuel Consumption

This is an indication of the average fuel consumption. After being reset the display will show dashes until 0.1 miles/km has been covered.

Instantaneous Fuel Consumption

An indication of the fuel consumption at an instant in time. If the motorcycle is stationary, --.- will be shown in the display area.

Range to Empty

This is an indication of the predicted distance that can be travelled on the remaining fuel in the tank.

Reset

To reset the average fuel consumption, press and hold the joystick centre.

Note

After refuelling, the fuel gauge and range to empty information will be updated only while riding the motorcycle. Depending on the riding style, updating could take up to five minutes.

Coolant

The coolant information tray menu indicates the temperature of the engine coolant.

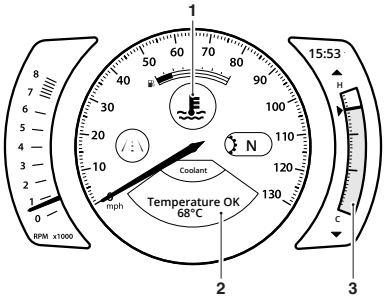

1. **Coolant symbol**
2. **Coolant information tray**
3. **Coolant temperature gauge**

The coolant temperature is shown in the information tray with a status message. The coolant temperature is also shown in a gauge in the right hand side display section. The gauge ranges between C (cold) and H (hot). When the engine is started from cold the gauge will show grey bars. As the temperature increases more bars in the gauge will be shown illuminated. When the engine is started from hot the gauge will show the relevant number of illuminated bars, dependant on engine temperature.

With the engine running, if the coolant temperature becomes dangerously high, the high coolant temperature warning light on the display will be illuminated and a message will be shown in the information tray.

⚠ Caution

Stop the engine immediately if the high coolant temperature warning light illuminates. Do not restart the engine until the fault has been rectified.

Severe engine damage will result from running the engine when the high coolant temperature warning light is illuminated.

Service Indicator and Odometer

The Service Indicator display shows the service symbol, the distance/days remaining before the next service and the current odometer reading. The odometer reading shows the total distance that the motorcycle has travelled.

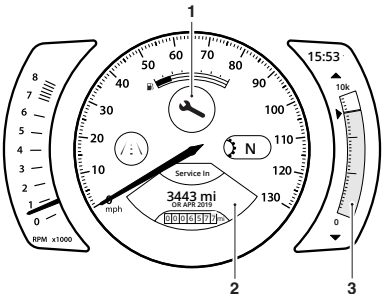

1. **Service symbol**
2. **Service indicator information tray**
3. **Service indicator gauge**

For more information on service indicator announcements, see page 48.

Tyre Pressure Monitoring System (TPMS) (if fitted)

The Tyre Pressure Monitoring System (TPMS) information tray item shows the front and rear tyre pressures. For more information on TPMS, see page 73.

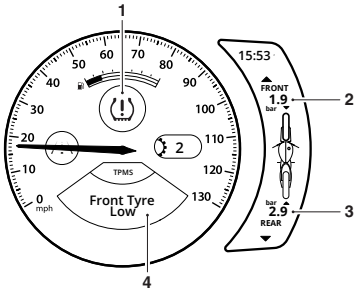

1. **TPMS symbol**
2. **Front tyre pressure display**
3. **Rear tyre pressure display**
4. **TPMS information tray**

Main Menu

To access the Main Menu:

- The motorcycle must be stationary with the ignition switched on.
- Press the HOME button on the right handlebar switch housing.
- Scroll the Main Menu by pushing the joystick down/up until the required option is selected and then press the joystick centre to confirm.

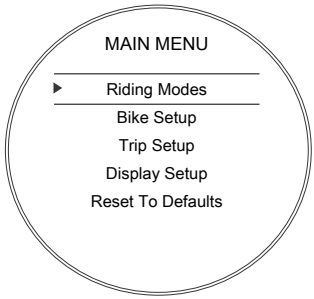

The Main Menu allows access to the following options:

Riding Modes

This menu allows configuration of the riding modes. For more information, see page 43.

Bike Setup

This menu allows configuration of the different features of the motorcycle. For more information, see page 47.

Trip Setup

This menu allows configuration of Trip 1 and Trip 2 meters. For more information, see page 49.

Display Setup

This menu allows configuration of the display options. For more information, see page 51.

Reset to Defaults

This menu allows all instrument settings to be returned to the default setting. For more information, see page 57.

Riding Modes

To change the riding modes settings:

- From the Riding Modes menu, push the joystick down/up to select a specific riding mode and press the joystick centre to confirm.

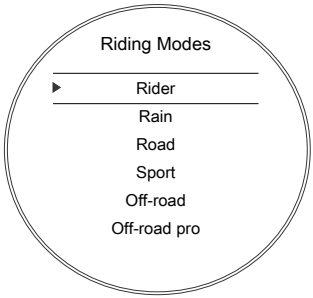

- Push the joystick down/up until the required setting option is selected and press the joystick centre to confirm.

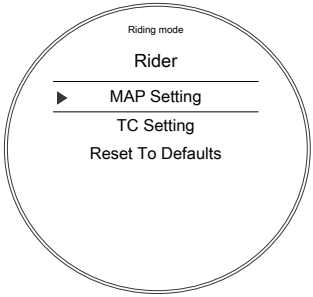

- Push the joystick down/up until the required option is selected and press the joystick centre to confirm.

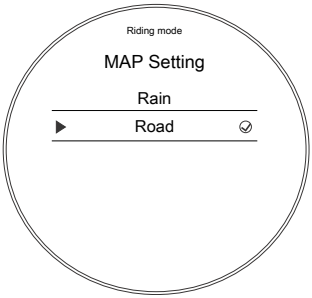

Riding Mode Configuration

Riding modes are available depending on the motorcycle model's specification. Refer to the following table for the ABS, MAP and TC settings available for each riding mode.

Riding Mode						
	Rider	Rain	Road	Sport	Off-Road	Off-Road Pro
ABS (Anti-lock Braking System)						
Road	●	●	●	●	⊘	⊘
Off-Road[1]	⊘	⊘	⊘	⊘	●	○
Off	⊘	⊘	⊘	⊘	⊘	●
MAP (Throttle Response)						
Rain	○	●	○	⊘	○	○
Road	●	○	●	○	○	○
Sport[1]	○	⊘	○	●	○	○
Off-Road[1]	○	⊘	⊘	⊘	●	●
TC (Traction Control)						
Rain	○	●	○	⊘	⊘	⊘
Road	●	○	●	○	⊘	⊘
Sport[1]	○	⊘	○	●	⊘	⊘
Off-Road[1]	○	⊘	⊘	⊘	●	○
Off	○	■	■	■	○	●

[1] Model Specific

Key

● = Standard (Factory Default Setting)	⊘ = Option Not Available
○ = Selectable Option	■ = Option Via Menu

ABS Settings

⚠ Warning

The Off-Road ABS option is not intended for use with normal, on-road riding.

Use of the rear brake pedal in this situation can cause the rear wheel to lock under heavy braking.

Riding on the road with the ABS set to Off-Road can lead to instability when braking which may result in loss of motorcycle control and an accident.

⚠ Warning

If the ABS is disabled, the brake system will function as a non-ABS braking system.

In this situation braking too hard will cause the wheels to lock, and may result in loss of motorcycle control and an accident.

ABS Settings Descriptions	
Road and Sport	Optimal ABS setting for road use.
Rain	Optimal ABS setting for rain use.
Off-Road	Front ABS is less intrusive. Rear ABS is disabled. Optimised cornering ABS is disabled.
Off-Road Pro	Front ABS is disabled. Rear ABS is disabled. Optimised cornering ABS is disabled. The ABS warning light will be illuminated.

MAP Settings

MAP Settings Descriptions	
Road	Standard throttle response.
Rain	Reduced throttle response when compared to the Road setting for wet or slippery conditions.
Sport	Increased throttle response when compared to the Road setting.
Off-Road	Optimal throttle response setting for off-road use.

Traction Settings Options

⚠ Warning

The Off-Road traction control option is not intended for normal, on-road riding.

Riding on the road with traction control set to Off-Road can produce instability under acceleration due to the increased amount of rear wheel slip allowed.

Instability caused by rear wheel slip may result in loss of motorcycle control and an accident.

⚠ Warning

If the traction control is disabled, the motorcycle will handle as normal but without traction control.

In this situation accelerating too hard on wet/slippery road surfaces may cause the rear wheel to slip which may result in loss of motorcycle control and an accident.

Traction Control Settings Descriptions	
Road	Optimal traction control setting for road use. Allows a small amount of rear wheel slip.
Rain	Optimal traction control setting for wet or slippery conditions. Allows reduced rear wheel slip when compared with the Road setting.
Sport	Allows increased rear wheel slip when compared with the Road setting.
Off-Road	Traction control is set up for off-road use. Allows increased rear wheel slip when compared to the Rain, Road and Sport setting. The traction control indicator light will flash slowly.
Off-Road Pro	Traction control is turned OFF. The traction control disabled warning light will be illuminated.

Bike Setup Menu

From the Main menu, select Bike Setup and push the joystick button to confirm.

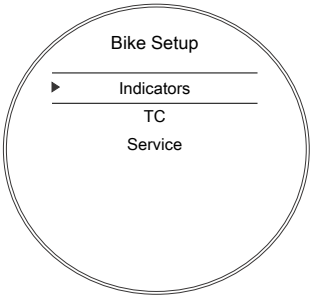

The Bike Setup menu allows access to the following options:

- Indicators
- Traction Control (TC)
- Service

Bike Setup - Direction Indicators

The direction indicators can be set to Auto Basic, Auto Advanced or Manual mode.

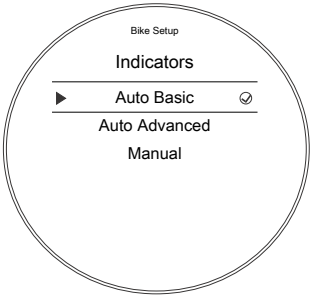

To select the required direction indicators mode:

- From the Bike Setup menu, push the joystick down to select Indicators and press the joystick centre to confirm.
- Push the joystick down/up to scroll between Auto Basic, Auto Advanced or Manual.
  - **Auto Basic** - The self-cancelling function is on. The direction indicators will activate for eight seconds and an additional 65 metres.
  - **Auto Advanced** - The self-cancelling function is on. A short press activates the direction indicators for three flashes. A longer press activates the direction indicators for eight seconds and an additional 65 metres.
  - **Manual** - The self-cancelling function is off. The direction indicators must be manually cancelled using the direction indicator switch.
- Press the joystick centre to confirm the required selection.
- The display will then return to the Bike Setup menu.

Bike Setup - Traction Control (TC)

It is possible to temporarily disable the traction control system. The traction control cannot be permanently disabled, it will be automatically enabled when the ignition is turned off and then on again, or if the default riding mode is activated by a long press of the MODE button.

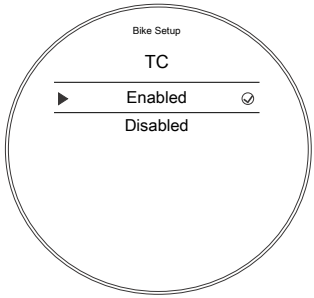

To select the required option:

- From the Bike Setup menu, push the joystick down to select TC and press the joystick centre to confirm.
- Push the joystick down/up to scroll between Enabled and Disabled.
- Press the joystick centre to select the required option.
- The display will then return to the Bike Setup display.

Bike Setup - Service

The service interval is set to a distance and/or time period.

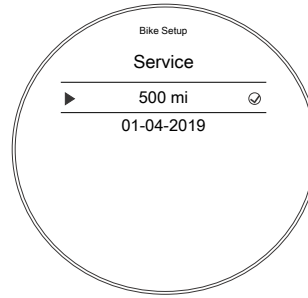

To review the service interval:

- From the Bike Setup menu, push the joystick down to select Service and press the joystick centre to confirm.
- The service time and distance information are then shown.

Trip Setup Menu

The Trip Setup menu allows configuration of the trip meters. Each trip meter can be configured to be reset either manually or automatically. The setup procedure is the same for both trip meters.

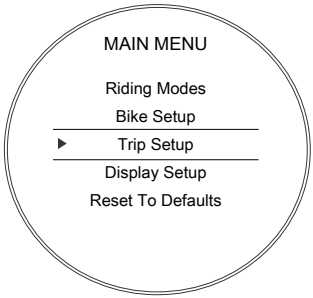

To access the Trip Setup menu:

- Press the HOME button to display the Main menu.
- Push the joystick down and then press the joystick centre to select Trip Setup.

The options available are:

- Trip 1 Reset
- Trip 2 Reset
- Trip 2 Display.

Trip Setup - Manual Reset

This menu allows the manual reset of each trip meter individually.

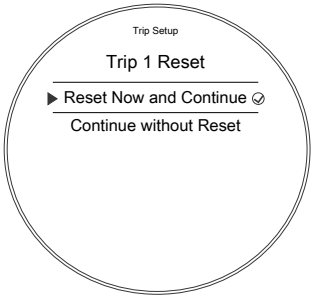

To set a trip meter manually:

- Push the HOME button to display the Main Menu.
- Push the joystick down and then press the joystick centre to select Trip Setup.
- Push the joystick down and then press the joystick centre to select either Trip 1 Reset or Trip 2 Reset.
- Push the joystick centre to select Manual.
- There are two options available:
  - **Reset Now and Continue** - Resets all trip meter data in the relevant trip meter.
  - **Continue without Reset** - The trip meter will not be reset.
- Press the joystick centre to confirm the selection and return to the previous menu.

Trip Setup - Automatic Reset

This menu allows the automatic reset of a trip meter after the ignition has been switched off for a set time.

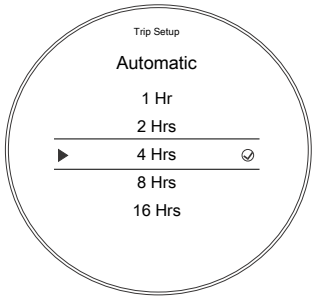

To set the trip meters to automatically reset:

- Push the HOME button to display the Main Menu.
- Push the joystick down and then press the joystick centre to select Trip Setup.
- Push the joystick down/up and then press the joystick centre to select Trip 1 Reset or Trip 2 Reset.
- Push the joystick down/up and select Automatic and then press the joystick centre.
- Push the joystick down/up to select the required timer setting and press the joystick centre to confirm the required time limit. The required time limit is then stored in the trip memory.

When the ignition is turned off, the trip meter is set to zero when the time period has elapsed.

The following table shows two examples of the automatic trip reset functionality.

Ignition Turned Off	Selected Time Delay	Trip Meter Resets to Zero
10:30 hrs	4 Hrs	14:30 hrs
18:00 hrs	16 Hrs	10:00 hrs (next day)

Trip 2 Enable/Disable

This menu allows Trip 2 meter to be enabled or disabled. If Trip 2 is disabled it will no longer be shown in the instrument display.

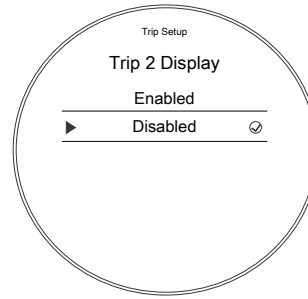

To enable or disable the Trip 2 meter:

- Push the MODE button to display the Main Menu.
- Push the joystick down to select Trip Setup.
- Push the joystick centre to display the Trip Setup menu.
- Push the joystick down/up to scroll to the Trip 2 Display and press the joystick centre.
- Push the joystick down/up to scroll between Enabled and Disabled and press the joystick centre.

Display Setup Menu

From the Main menu, select Display Setup and push the joystick button to confirm.

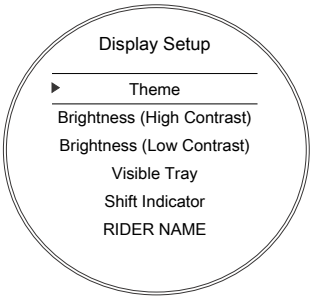

The Display Setup menu allows access to the following options:

- Theme
- Brightness (High Contrast)
- Brightness (Low Contrast)
- Visible Tray
- Shift Indicator
- Rider Name
- Language
- Units
- Clock
- Date.

Display Setup - Themes

To select a different theme the motorcycle must be stationary with the ignition turned to the ON position.

- Push the HOME button to display the Main Menu.
- Push the joystick down and then press joystick centre to select Display Setup.
- Push the joystick centre to display the Theme menu.
- Press the joystick centre to select the required theme.

The new theme will be shown and saved. Press the HOME button to exit.

Display Setup - Brightness

The brightness feature allows the screen's brightness contrast to be changed for day time and night time riding. In bright sunlight, the brightness settings will adapt to make sure that the instruments can be viewed at all times.

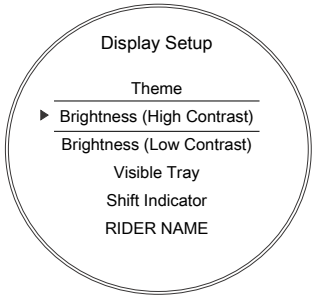

There are two brightness options to choose from; High Contrast and Low Contrast.

To change the brightness level:

- From the Display Setup menu, push the joystick down to select Brightness (High Contrast) or Brightness (Low Contrast).
- Push the joystick centre to confirm.
- Push the joystick down/up to adjust the brightness.
- Press the joystick centre to confirm the required level of brightness.
- Press the HOME button to return to the main display.

Display Setup - Visible Tray

The Visible Tray feature allows the selection of required information tray items to be shown in the instrument panel display.

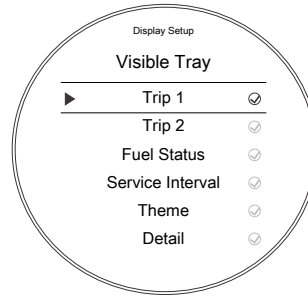

To select the Visible Tray menu:

- From the Display Setup menu, push the joystick down to select Visible Tray and press the joystick centre to confirm.
- Push the joystick down/up until the required information tray item is selected.
- Press the joystick centre to select/deselect the information tray item.

- The options include:
  - Trip 1
  - Trip 2
  - Fuel Status
  - Service Interval
  - Theme
  - Detail
  - Contrast
  - Coolant.
- An information tray item with a tick next to it will be shown in the instrument panel display. An information tray item without a tick next to it will not be shown in the instrument panel display.

Display Setup - Shift Indicator

This menu allows the adjustment of the gear shift indicator.

The gear shift indicator changes the tachometer colour to orange when the specified engine speed threshold is reached, indicating to change gear.

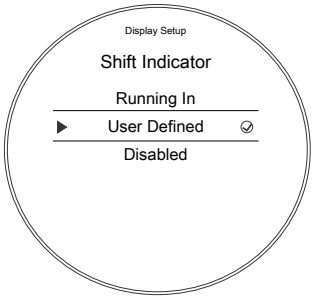

The engine speed threshold can be defined and reset, and the gear shift indicator can be disabled. Once the engine has been run in (at 1,000 miles), the Running In option is replaced with a Default option.

From the Shift Indicator menu, push the joystick down to select User Defined and press the joystick centre to confirm.

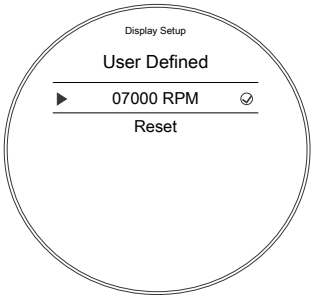

To adjust the engine speed threshold (RPM) for the gear shift indicator:

- Push the joystick left/right to select each individual number.
- Push the joystick down/up to change the number.
- Press the joystick centre to confirm selection.
- Repeat this process with each individual number until the correct RPM number is shown.

To reset the gear shift indicator:

- Push the joystick down/up to select Reset and press the joystick centre to confirm. This resets the RPM to 07000.

Display Setup - Rider Name

This menu allows the rider name to be entered in to the instrument panel system and shown in the welcome/start up display screen.

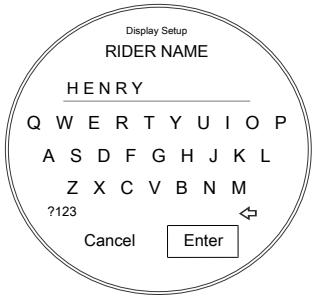

To enter a rider's name:

- From the Display Setup menu, push the joystick down to select Rider Name and press the joystick centre to confirm.
- Using the joystick, navigate the keyboard and select the first letter of the rider's name. Press the joystick button to confirm. The letter appears at the top of the keyboard.
- Repeat the procedure until the whole rider name has been selected. There is a character limit of 13 characters.
- Selecting ?123 shows a new keyboard of symbols and numbers to select from.
- Once the rider's name has been completed, select Enter and click on the joystick button to confirm.
- The rider's name will now appear on the welcome screen the next time the instruments are started.

Display Setup - Language

There are several different languages that can be selected to be shown in the instrument display screen.

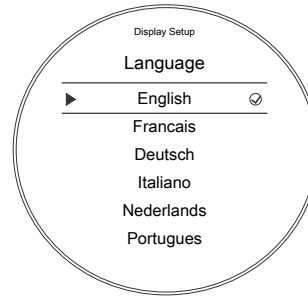

To select a different language:

- From the Display Setup menu, push the joystick down to select Language and press the joystick centre to confirm.
- Push the joystick down/up until the required language is selected.
- The following options are available:
  - English
  - French
  - German
  - Italian
  - Dutch
  - Portuguese
  - Spanish
  - Swedish.
- Press the joystick centre to select/deselect the required language.

Display Setup - Units

There are different units of measurement options that can be shown in the display screen.

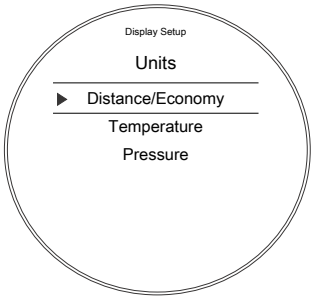

To select the units of measurement required:

- From the Display Setup menu, push the joystick down to select Units and press the joystick centre to confirm.
- Push the joystick down/up to select the required unit; Distance/Economy, Temperature or Pressure.
- Push the joystick down/up to select the required unit of measurement from the following options:
  - **Distance/Economy:**
  - Miles and MPG (UK)
  - Miles and MPG (US)
  - KM and L/100KM
  - KM and KM/L
  - **Temperature:**
  - °C
  - °F
  - **Pressure:**
  - PSI
  - Bar
  - KPa
- Press the joystick centre to confirm.

Display Setup - Clock

This function allows the adjustment of the clock.

To set the clock:

- From the Display Setup menu, push the joystick down to select Clock and press the joystick centre to confirm.
- Push the joystick down/up to select between either 12 Hr or 24 Hr clock and press the joystick centre to confirm selection. The clock will display in either 12 or 24 hour format. Once the clock format is set the display will return to the Clock menu.

To set the time, push the joystick down/up to select Hours or Minutes.

To adjust the hour setting:

- Select Hours on the display and press the joystick centre, a tick will appear next to Hours and the hours display will flash as shown below.
- Push the joystick down/up to set the hour and press the joystick centre to confirm.

To adjust the minute setting:

- Select Minutes on the display and press the joystick centre, a tick will appear next to Minutes and the minutes display will flash as shown below.
- Push the joystick down/up to set the correct minute and press the joystick centre to confirm.

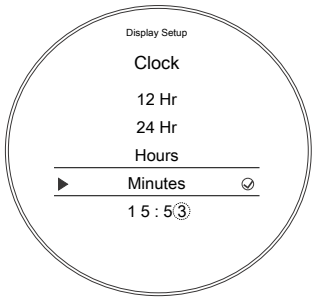

Display Setup - Date

This function allows the adjustment of the date and date format.

To set the date format:

- From the Display Setup menu, push the joystick down to select Date and press the joystick centre to confirm.
- Press the joystick centre to display Date Format.

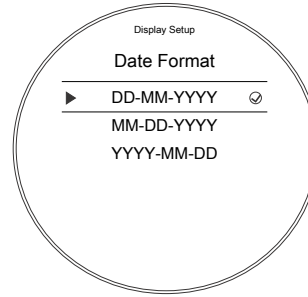

- Push the joystick down/up to select the required date format.
- The following options are available:
  - DD-MM-YYYY
  - MM-DD-YYYY
  - YYYY-MM-DD.
- Press the joystick centre to confirm the selection. Once the date format is set the display will return to the Date menu.

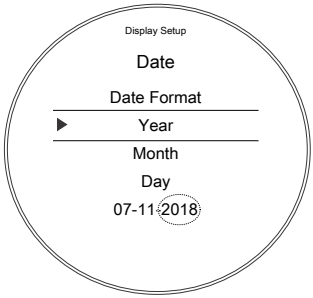

To set the date, push the joystick down/up to select the Year, Month and Day.

- Select Year and then press the joystick centre, a tick will appear next to the Year and the Year display will flash.
- Push the joystick down/up to set the current year and then press the joystick centre to confirm.
- To set the Month and Day repeat the procedure used to set the year. Once the date is set the display will return to the Date menu.

Reset to Defaults

This function allows the Main Menu items to be reset to the default setting.

To reset the Main Menu display:

- Press the HOME button to display the Main Menu.
- Push the joystick down and then press the joystick centre to select Reset To Defaults.
- The options are:
  - **Confirm** - The following main menu settings and data will be reset to the factory default values - Riding Modes, Indicator Setup, Trip Computers, Visible Trays, Language, Traction Control, Themes and Display Brightness.
  - **Cancel** - The main menu settings and data will remain unchanged and the display will return to the previous level.

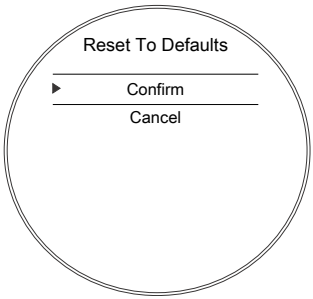

- Select the required option and press the joystick button to confirm.

Instrument Panel Position Adjustment

Warning

Operation of the motorcycle with an incorrectly adjusted instrument panel is dangerous.

An incorrectly adjusted instrument panel will result in loss of instrument vision when riding and may cause a distraction leading to loss of control of the motorcycle and an accident.

Always adjust the instrument panel to provide sufficient vision of the instruments before riding the motorcycle.

Warning

Never attempt to clean or adjust the instrument panel while riding the motorcycle. Removal of the rider's hands from the handlebar while riding the motorcycle will diminish the ability of the rider to maintain control of the motorcycle.

Attempting to clean or adjust the instrument panel while riding the motorcycle may result in loss of control of the motorcycle and an accident.

Only attempt to clean or adjust the instrument panel while stationary.

Caution

Do not press directly onto the instrument panel display screen.

Only adjust the position of the instrument panel using the adjustment lever.

Pressing directly on the instrument panel display screen may damage the instrument panel.

The instrument panel can be adjusted to allow for improved visibility of the display screen.

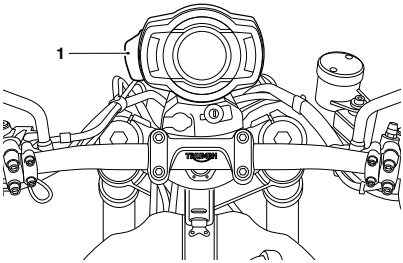

1. **Adjustment lever**

To adjust the instrument panel:

- Using the lever, move the instrument panel to allow an unobstructed view of the display screen.

Note

Moderate force using the thumb and finger is required to adjust the position of the instrument panel.

Keys

There are three keys supplied with the motorcycle. One smart key and two standard keys.

Warning

Additional keys, key rings/chains or items attached to the key may interfere with the steering, leading to loss of motorcycle control and an accident.

Remove all additional keys, key rings/chains and items from the key before riding the motorcycle.

Caution

Additional keys, key rings/chains or items attached to the key may cause damage to the motorcycle's painted or polished components.

Remove all additional keys, key rings/chains and items from the key before riding the motorcycle.

Caution

The motorcycle must not be ridden with the key in the steering lock or seat lock.

Always lock the seat and remove the key before riding the motorcycle.

Caution

Do not store the spare key with the motorcycle as this will reduce all aspects of security.

Smart Key

There is one smart key supplied with the motorcycle.

Caution

All keys supplied with the motorcycle are specific to the individual motorcycle. They cannot be used on another motorcycle.

If all keys are lost, misplaced or damaged, then the KCU control unit on the motorcycle will need to be replaced.

To avoid unnecessary cost and time, make sure that all spare keys are kept in a secure location.

Caution

If there is a fault with the smart key or the smart key battery is discharged then take the smart key to the nearest Triumph dealer to rectify.

Note

An additional smart key can be purchased from your Triumph dealer. However, only three keys can be programmed to the motorcycle. This can be a combination of smart keys and standard keys.

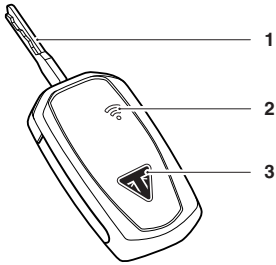

1. **Smart key blade**
2. **Status symbol**
3. **ON/OFF button**

The smart key operates the keyless ignition system. The smart key blade operates the seat lock, steering lock and fuel tank cap.

Smart Key Battery Replacement

Warning

There is a risk of explosion if an incorrect battery is used.

Always make sure that the correct battery size and type is used.

Warning

Batteries contain harmful materials.

Always keep batteries out of the reach of infants and young children to prevent them being swallowed.

If swallowed, consult a doctor immediately.

Caution

Do not touch the contact faces of the battery with your skin. Only touch the edges of the battery when you hold it.

The natural materials in your skin can cause corrosion and shorten the life of the battery.

To replace the smart key battery:

- Make sure that the smart key is in passive mode (red LED).
- Remove the battery cover fixing using a 1.5 mm AF Allen key.
- Remove the battery cover.
- Remove the battery, noting its orientation.
- Insert a new 3 Volt CR2032 Lithium battery.
- Replace the battery cover making sure that it aligns correctly.
- Refit the battery cover fixing and tighten to 0.3 Nm.

Battery Disposal

The used battery must be handed to a recycling agent who will make sure that the dangerous substances from which the battery is manufactured do not pollute the environment.

Standard Key

There are two standard keys supplied with the motorcycle. The standard key operates the seat lock, steering lock and the fuel tank cap.

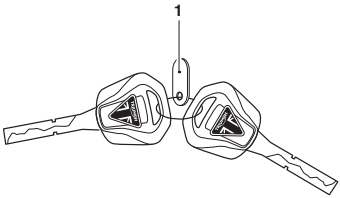

1. Key number tag

They have a small tag attached to them bearing the key number. Make a note of the key number and store the spare key and key number tag in a safe place away from the motorcycle. Always get replacement keys from your authorised Triumph dealer.

Keyless Ignition

The keyless ignition system allows the motorcycle to be started without the use of a mechanical key.

Smart Key Operation

To turn the motorcycle on with the keyless ignition:

- The smart key must be within close proximity (one metre/three feet) of a system sensor. There is a system sensor located under the seat, and another system sensor located in the headlight unit. If the smart key is out of range of a system sensor then it will be unresponsive and the keyless ignition cannot be activated.
- Press the button on the smart key to turn the key on. The button light shows green briefly to indicate that the smart key is on.
- A short press on the smart key button shows the status of the smart key; red is OFF and green is ON.
- A long press of the button will change the status to OFF or ON after briefly showing the original status colour first.
- For more information on starting the engine with keyless ignition, see page 92.

Note

For security reasons, the smart key should be switched off every time it is removed from the motorcycle.

If the smart key battery is discharged, then use the smart key in the standard key operation method.

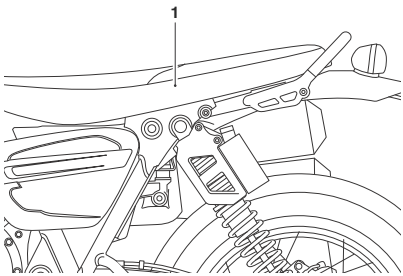

1. **System sensor location**

Standard Key Operation

To turn the motorcycle on with the standard key (or the smart key if the battery is discharged):

- Remove the seat.
- The system sensor location is shown as a signal symbol in the seat storage tray.
- Hold the standard key on the system sensor located under the seat.
- The standard key must be held against the system sensor while pressing the Engine Start/Stop switch in either the QUICK START or Power ON/OFF position (see page 63).

Master Ignition Switch (if fitted)

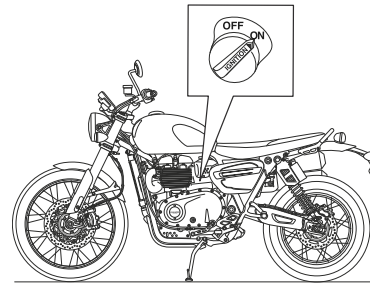

Master Ignition Switch

The master ignition switch is only fitted to motorcycles in the United States. The master ignition switch is located on the left hand side of the motorcycle.

To operate the motorcycle with the keyless ignition, the master ignition switch must be in the ON position.

If the master ignition switch is in the OFF position then the keyless ignition cannot be used and the motorcycle can not be started.

Steering Lock

Warning

Always disengage the steering lock before riding.

If the steering lock is engaged, it is not possible to turn the handlebars or steer the motorcycle.

Riding without motorcycle steering control will lead to loss of motorcycle control and an accident.

The steering lock is located on the upper yoke.

It is a two position, key operated lock. The key can be removed in either the engaged or disengaged positions.

To engage the steering lock:

- Insert the key and turn clockwise.
- At the same time, turn the handlebar fully left until the lock engages.

To disengage the steering lock:

- Insert the key.
- Turn the handlebar slightly to relieve any weight on the steering lock, and turn the key anticlockwise.

To remove the key:

- Rotate the key clockwise slightly to disengage the retaining mechanism before it can be removed from the lock.

Right Handlebar Switches

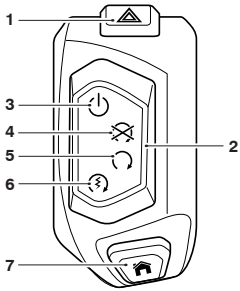

1. **Hazard warning lights switch**
2. **Engine start/stop switch**
3. **Power ON/OFF position**
4. **STOP position**
5. **RUN position**
6. **QUICK START position**
7. **HOME button**

Hazard Warning Lights Button

To turn the hazard warning lights on or off, press and release the hazard warning light button.

The ignition must be switched on for the hazard warnings lights to be activated, but the hazard lights will remain active if the ignition is switched off until the hazard warning light button is pressed again.

Power ON/OFF Position

The Power ON/OFF position switches the electrical circuits and the instrument display between on or off. This allows access to the instrument display without starting the engine.

Caution

Do not leave the switch in the Power ON position for a long period of time as this may cause damage to electrical components and will discharge the battery.

STOP Position

The STOP position stops the engine. It does not turn off all the electrical circuits and may cause difficulty in restarting the engine due to a discharged battery.

RUN Position

The engine start/stop switch must be in the RUN position for the motorcycle to operate.

QUICK START Position

The QUICK START position operates the electric starter allowing for a quicker ignition start.

From the ignition off, press and hold the engine start/stop switch in the QUICK START position with all the correct conditions met, to start the motorcycle.

For more information, see page 92.

HOME Button

The HOME button is used to access the main menu on the instrument display.

Press and release the HOME button to select between the main menu and instrument display.

All messages that appear in the instrument display must be acknowledged by pressing the Joystick centre before the HOME button can be operated.

Left Handlebar Switches

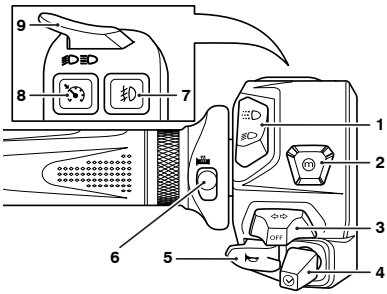

1. **Daytime Running Lights (DRL) switch (if fitted)**
2. **MODE button**
3. **Direction indicator switch**
4. **Joystick button**
5. **Horn button**
6. **Heated grips switch (if fitted)**
7. **Front fog lights switch**
8. **Cruise control button**
9. **High beam button**

Daytime Running Lights (DRL) Switch (if fitted)

When the ignition is switched ON and the daytime running lights switch is set to DRL mode, the daytime running lights warning light will illuminate.

The daytime running lights and low beam headlights are operated manually using the DRL switch. Press the top of the switch for DRL mode, and the bottom of the switch for low beam headlight mode.

During daylight hours the daytime running lights improve the motorcycles visibility to other road users. Low beam headlights must be used in any other conditions unless the road conditions allow for high beam headlights to be used.

Warning

Do not ride for longer than necessary in poor ambient light conditions with the Daytime Running Lights (DRL) in use.

Riding with the Daytime Running Lights when dark, in tunnels or where poor ambient light is apparent may reduce the riders vision or dazzle other road users.

Dazzling other road users or reduced vision in low ambient light levels may result in loss of motorcycle control and an accident.

MODE Button

When the MODE button is pressed and released it will activate the Riding Mode Selection Menu in the display screen. Further presses of the MODE button will scroll through the available riding modes, see Riding Mode Selection on page 32.

Press and hold the MODE button when a riding mode is selected provides direct access to the riding mode's configuration menu.

For more information on riding mode selection and configuration, see page 44.

Direction Indicators Switch

When the indicator switch is pushed to the left or right and released, the corresponding direction indicators will flash on and off. To turn off the indicators, push and release the switch in the central position.

There are three direction indicators options:

- **Auto Basic** - The self-cancelling function is on. The direction indicators will activate for eight seconds and an additional 65 metres.
- **Auto Advanced** - The self-cancelling function is on. A short press activates the direction indicators for three flashes. A longer press activates the direction indicators for eight seconds and an additional 65 metres.
- **Manual** - The self-cancelling function is off. The direction indicators must be manually cancelled using the direction indicator switch.

To select a direction indicator option, refer to the Bike Setup section on page 47.

The indicators can be cancelled manually. To manually turn off the indicators, press and release the indicator switch in the central position.

Joystick Button

The Joystick is used to operate the following functions of the instruments:

- Up - scroll the menu from the bottom to the top
- Down - scroll the menu from the top to the bottom
- Left - scroll the menu to the left
- Right - scroll the menu to the right
- Centre - press to confirm selection.

Horn Button

When the horn button is pushed, with the ignition ON, the horn will sound.

Heated Grips Switch (if fitted)

The heated grips will only heat when the engine is running.

When the heated grips are switched on, the heated grips symbol will appear in the display and the selected heat level will be shown.

There are three levels of heat: low, medium and high. This is indicated by the different colours of the symbols shown in the instrument display.

1. **Low heat symbol (yellow)**
2. **Medium heat symbol (orange)**
3. **High heat symbol (red)**

For maximum benefit in cold conditions, from the OFF position press the switch once for the high heat setting initially and then reduce the heat level by pressing the switch again for a low heat setting when the grips have warmed up.

To turn off the heated grips, press and release the switch until the heated grips symbol is no longer shown in the display.

Low Power Voltage Cut Off

If a low voltage is detected, the heated grips switch will power off. The heated grips will not function again until the voltage rises to a safe level.

The switch will not power back on automatically even if the voltage rises to the safe level. The user must manually press the switch again to activate the heated grips.

Fog Lights Switch

To turn the fog lights on or off, with the headlights on, press and release the fog lights switch. When the fog lights are turned on, the fog lights indicator will illuminate in the display.

The fog lights switch will only operate when the headlights are on. The fog lights switch will reset to off when the ignition is turned off then on again.

Cruise Control Button (if fitted)

When the cruise control button is pressed, the cruise control is on. Cruise control remains on until the button is pressed again to turn off the cruise control. Cruise control can be switched on or off at any time but it cannot be activated until certain conditions have been met. For more information, see page 68.

High Beam Button

The high beam button has a different function depending on whether Daytime Running Lights (DRL) are fitted or not. When the high beam is turned on, the high beam indicator light will illuminate in the display.

Models with Daytime Running Lights (DRL)

If the DRL switch is in the Daytime Running Lights (DRL) position, then press and hold the high beam button to turn the high beam on. It will remain on as long as the button is held in and will turn off as soon as the button is released.

If the DRL switch is in the dip beam position, press the high beam button to switch the high beam on. Each press of the button will swap between dip and high beam.

A lighting on/off switch is not fitted to this model. The rear light and licence plate light all function automatically when the ignition is turned to the ON position. The headlight will function when the ignition is turned on and the engine is running.

Models without Daytime Running Lights (DRL)

Press the high beam button to switch the high beam on. Each press of the button will swap between dip and high beam.

A lighting on/off switch is not fitted to this model. The position light, rear light and licence plate light all function automatically when the ignition is turned to the ON position. The headlight will function when the ignition is turned on and the engine is running.

Cruise Control

Warning

Cruise control must only be used where you can ride safely at a steady speed.

Cruise control should not be used when riding in heavy traffic, on roads with sharp/blind bends or when they are slippery.

Using cruise control in heavy traffic, on roads with sharp/blind bends or when they are slippery, may result in loss of motorcycle control and an accident.

Warning

This Triumph motorcycle should be operated within the legal speed limits for the particular road travelled.

Operating a motorcycle at high speeds can be potentially dangerous since the time available to react to given traffic situations is greatly reduced as road speed increases.

Always reduce speed in potentially hazardous driving conditions such as bad weather or heavy traffic.

Warning

Only operate this Triumph motorcycle at high speed in closed-course, on-road competition or on closed-course racetracks.

High speed operation should only then be attempted by riders who have been instructed in the techniques necessary for high speed riding and are familiar with the motorcycle's characteristics in all conditions.

High speed operation in any other circumstances is dangerous and will lead to loss of motorcycle control and an accident.

Cruise control may not function if there is a malfunction with the ABS and the ABS warning light is illuminated. Cruise control will continue to function if a riding mode is selected with ABS set to Off-Road or Off. Cruise control will continue to function if the ABS has been disabled.

The cruise control button is located on the left hand switch housing and can be operated with minimum movement by the rider.

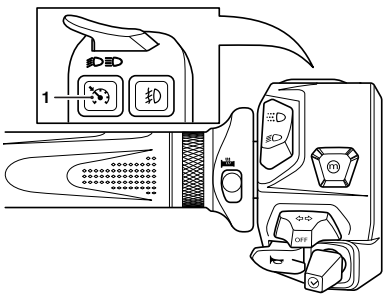

1. **Cruise control button**

Cruise control can be switched on or off at any time but it cannot be activated until all the conditions described on page 69 have been met.

Activating Cruise Control

The following conditions must be met to activate cruise control:

- The motorcycle must be travelling at a speed between 30 to 100 mph (48 to 160 km/h).
- The motorcycle must be in 3rd gear or higher.

To activate cruise control:

- Press the cruise control button to turn the cruise control system on. The cruise control symbol will be shown in the display screen.
- When the required cruising speed is achieved, press the cruise control button again to activate the cruise control.
- The word SET will be shown next to the cruise control symbol. The cruise control set speed will then be shown.

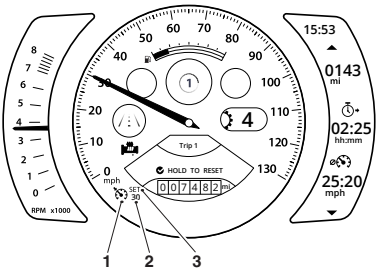

1. **Cruise control symbol**
2. **Cruise control set speed**
3. **Cruise control set indicator**

The cruise control system will maintain the set speed until cruise control is deactivated as described on page 70.

Deactivating Cruise Control

The cruise control can be deactivated by one of the following methods:

- Roll the throttle twist grip fully forward.
- Pull the clutch lever.
- Operate the front or rear brake.
- Increase speed by using the throttle for more than 60 seconds.

Upon deactivation, the cruise control symbol will disappear but the SET indicator and set speed will still be shown in the display screen, indicating that the cruise control set speed has been stored.

Traction Control (TC)

Warning

The traction control and optimised cornering traction control systems are not a substitute for riding appropriately for the prevailing surface and weather conditions. The systems cannot prevent loss of traction due to; excessive speed when entering turns, accelerating at a sharp lean angle and braking.

Traction control or optimised cornering traction control cannot prevent the front wheel from slipping.

Failure to observe any of the above may result in loss of motorcycle control and an accident.

Warning

If the traction control system is not functioning, care must be taken when accelerating and cornering on wet/slippery road surfaces to avoid rear wheel spin.

In the event of a fault, the traction control disabled warning light may be accompanied by the engine management system malfunction indicator light and/or the ABS warning light.

Do not continue to ride for longer than is necessary with any of the above warning lights illuminated. Contact an authorised Triumph dealer as soon as possible to have the fault checked and rectified.

Hard acceleration and cornering in this situation may cause the rear wheel to spin resulting in loss of motorcycle control and an accident.

All motorcycles are equipped with Traction Control (TC). Traction control is a system that helps to maintain traction when accelerating on wet/slippery road surfaces. If sensors detect that the rear wheel is losing traction (slipping), the traction control system will engage and alter the engine power until traction to the rear wheel has been restored. The traction control indicator light will flash while it is engaged and a change to the sound of the engine may be noticed. For information on the traction control indicator light operation, see page 28.

Note

Traction control may not always be active depending on the riding mode selected.

Traction control and optimised cornering traction control (if fitted) may not function if there is a malfunction with the ABS system. In this situation, the warning lights for the ABS, traction control and the MIL may be illuminated.

Optimised Cornering Traction Control (if fitted)

Warning

If a fault occurs with the optimised cornering traction control system, the traction control disabled warning light will illuminate and a message will be shown in the display.

In this situation, the traction control system will continue to operate but without the optimised cornering function, provided that:

- There are no other faults with the traction control system.

- Traction control has NOT been disabled (see Bike Setup on page 48 or Riding Mode Configuration on page 44).

Care must be taken when accelerating and cornering on wet/slippery road surfaces to avoid rear wheel spin.

In the event of a fault, the traction control disabled warning light may be accompanied by the engine management system malfunction indicator light and/or the ABS warning light.

Do not continue to ride for longer than is necessary with any of the above warning lights illuminated. Contact an authorised Triumph dealer as soon as possible to have the fault checked and rectified.

Hard acceleration and cornering in this situation may cause the rear wheel to spin resulting in loss of motorcycle control and an accident.

Optimised cornering traction control is a system designed to provide increased control should the traction control be activated whilst the motorcycle is leaning in a corner.

The system constantly monitors the lean angle of the motorcycle and adapts the level of traction control intervention to maintain rear wheel traction during cornering.

Optimised cornering traction control is not active when in Off-road mode.

Traction control and optimised cornering traction control (if fitted) may not function if there is a malfunction with the ABS system. In this situation, the warning lights for the ABS, traction control and the MIL may be illuminated.

For full details of the traction control disabled warning light operation and its associated instrument warning messages, see page 28.

Traction Control Settings

Warning

If the traction control is disabled, the motorcycle will handle as normal but without traction control.

In this situation accelerating too hard on wet/slippery road surfaces may cause the rear wheel to slip, and may result in loss of motorcycle control and an accident.

The traction control system can be disabled as described in Bike Setup on page 48, or set to the conditions described in Riding Mode Configuration on page 44.

ABS Enable

If the ABS has been disabled when riding in a particular riding mode, it can enabled again with the motorcycle stationary or moving.

To enable the ABS system when the motorcycle is stationary, do one of the following:

- Turn the ignition OFF and then ON.
- With the ignition ON, press and hold the MODE button for more than one second.

The ABS will be enabled when the motorcycle reaches a speed exceeding 6 mph (10 km/h). The ABS warning light will turn off.

To enable the ABS system when the motorcycle is moving, do the following:

- Press and hold the MODE button for more than one second.

Warning

If the ABS is enabled during a braking manoeuvre by pressing the MODE button, the ABS will become operational. Enabling the ABS during a braking manoeuvre may change the handling characteristics and the stability of the motorcycle.

Changes to the handling characteristics of the motorcycle during a braking manoeuvre may result in loss of motorcycle control and an accident.

After riding with the ABS disabled, always make sure that the ABS is enabled before returning to ride on public roads.

Riding with the ABS disabled will, if braking too hard, cause the wheels to lock resulting in loss of motorcycle control and an accident.

Tyre Pressure Monitoring System (TPMS) (if fitted)

Warning

The daily check of tyre pressures must not be excluded because of the fitment of the Tyre Pressure Monitoring System (TPMS).

Check the tyre pressure when the tyres are cold using an accurate tyre pressure gauge, see the Tyre section for more information.

Use of the TPMS system to set inflation pressures may lead to incorrect tyre pressures leading to loss of motorcycle control and an accident.

Tyre pressure sensors are fitted to the front and rear wheels. These sensors measure the air pressure inside the tyre and transmit pressure data to the instruments. The sensors will not transmit data until the motorcycle reaches a speed of approximately 12 mph (20 km/h). Two dashes will be shown in the system display until the tyre pressure signal is received.

After bringing the motorcycle to a stop, the sensors continue to transmit data for approximately seven minutes before switching off. The tyre pressure values remain shown in the system display until the sensors switch off.

An adhesive label will be fitted to the wheel rim to indicate the position of the tyre pressure sensor, which is near the valve.

Note

The Tyre Pressure Monitoring System (TPMS) is available as an accessory kit. It must be fitted by your authorised Triumph dealer.

The TPMS display on the instruments will only be activated when the system has been fitted.

Tyre Pressure Sensor Serial Number

The serial number for the tyre pressure sensor is printed on a label attached to the sensor. This number may be required by your authorised Triumph dealer for service or diagnostics.

When the tyre pressure monitoring system is being fitted to the motorcycle, make sure that your authorised Triumph dealer records the serial numbers of the front and rear tyre pressure sensors in the spaces provided below.

Front Tyre Pressure Sensor

Rear Tyre Pressure Sensor

TPMS System Display

Warning

Stop the motorcycle if the tyre pressure warning light illuminates.

Do not ride the motorcycle until the tyres have been checked and the tyre pressures are at their recommended pressure when cold.

The tyre pressure warning light works in conjunction with the Tyre Pressure Monitoring System (TPMS).

The warning light will illuminate when the front or rear tyre pressure is below the recommended pressure. It will not illuminate if the tyre is over inflated.

When the warning light is illuminated, the TPMS symbol indicating which is the deflated tyre and its pressure will automatically be shown in the tyre pressure display.

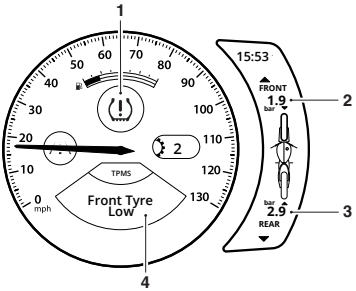

1. **TPMS warning light**
2. **Front tyre pressure indicator**
3. **Rear tyre pressure indicator**
4. **TPMS information tray message**

The tyre pressure at which the warning light illuminates is temperature compensated to 20°C but the numeric pressure display associated with it is not. Even if the numeric display seems at or close to the standard tyre pressure when the warning light is on, a low tyre pressure is indicated and a puncture is the most likely cause.

The information display will automatically switch to the tyre pressure display when a low tyre pressure is detected.

Dashes will be shown in the tyre pressure display until the motorcycle reaches a speed of approximately 12 mph (20 km/h).

Sensor Batteries

When the battery voltage in a pressure sensor is low, the TPMS symbol will be shown in amber and a message will indicate which wheel sensor has the low battery voltage.

If the batteries are completely flat, only dashes will be shown in the display screen and the red TPMS warning light will be on. A message will also be shown in the display.

Contact your authorised Triumph dealer to have the sensor replaced and the new serial number recorded in the spaces provided on page 74.

With the ignition switched on, if the TPMS symbol flashes continuously or the TPMS warning light remains on there is a fault with the TPMS system. Contact your Triumph dealer to have the fault rectified.

TPMS System Fault

If a fault occurs with the TPMS system, the TPMS warning light will be illuminated red to indicate that the system can't show the pressure or the pressure is low. If the TPMS warning light illuminates amber then that indicates that the battery is low but the pressure is available. A message will also be shown in the information tray. Contact your authorised Triumph dealer to have the fault rectified.

Tyre Pressures

Warning

The Tyre Pressure Monitoring System (TPMS) is not to be used as a tyre pressure gauge when adjusting the tyre pressures.

For correct tyre pressures, always check the tyre pressures when the tyres are cold using an accurate tyre pressure gauge.

Use of the TPMS system to set inflation pressures may lead to incorrect tyre pressures leading to loss of motorcycle control and an accident.

Caution

Do not use anti puncture fluid or any other item likely to obstruct air flow to the TPMS sensor's orifices. Any blockage to the air pressure orifice of the TPMS sensor during operation will cause the sensor to become blocked, causing irreparable damage to the TPMS sensor assembly.

Damage caused by the use of anti puncture fluid or incorrect maintenance is not considered a manufacturing defect and will not be covered under warranty.

Always have your tyres fitted by your authorised Triumph dealer and inform them that tyre pressure sensors are fitted to the wheels.

The tyre pressures shown on your instrument panel indicate the actual tyre pressure at the time of selecting the display. This may differ from the inflation pressure set when the tyres are cold because tyres become warmer during riding, causing the air in the tyre to expand and the inflation pressure to increase. The cold inflation pressures specified by Triumph take account of this.

Only adjust tyre pressures when the tyres are cold using an accurate tyre pressure gauge and do not use the tyre pressure display on the instruments. Always refer to the tyre pressures shown in the Specifications section.

Replacement Tyres

When replacing tyres, always have an authorised Triumph dealer fit your tyres and make sure they are aware that tyre pressure sensors are fitted to the wheels.

Front Brake Lever

Scrambler 1200 Steve McQueen Edition and Scrambler 1200 XE

There are two adjusters fitted to the brake lever; a span adjuster and a ratio adjuster.

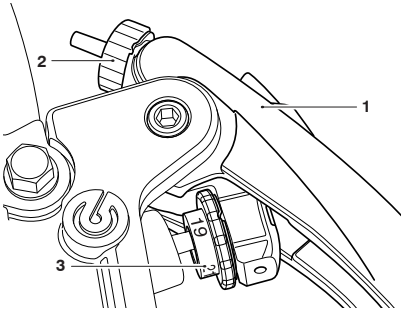

1. **Brake lever**
2. **Span adjuster**
3. **Ratio adjuster**

Span Adjuster

The span adjuster allows the distance from the handlebar to the lever to be changed to suit the span of the rider's hands.

To adjust the front brake lever span:

- Rotate the span adjuster anticlockwise to decrease the distance to the handlebar or clockwise to increase the distance from the handlebar.
- The distance from the handlebar grip to the released lever is shortest when the span adjuster is rotated fully anticlockwise.

Ratio Adjuster

The ratio adjuster moves the brake master cylinder push rod to the left or right in 1 mm increments from 19 mm to 21 mm.

To adjust the front brake lever ratio:

- Rotate the ratio adjuster to the rider's preferred position. The ratio adjuster can be rotated both clockwise and anticlockwise to set the desired preference.
- An audible click can be heard when the ratio adjuster is locked into position.
- The ratio adjuster has three lever positions:
- 19 (19 mm) for a softer brake feel with a longer lever travel.
- 20 (20 mm) for a firmer brake feel and a medium lever travel.
- 21 (21 mm) for a firm brake feel and a shorter lever travel.

Scrambler 1200 XC

An adjuster is fitted to the front brake lever. The adjuster allows the distance from the handlebar to the brake lever to be changed to suit the span of the rider's hands.

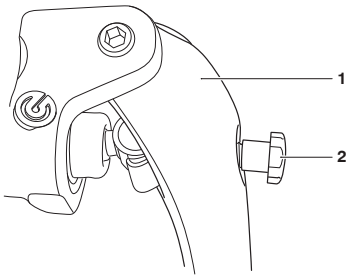

1. **Brake lever**
2. **Span adjuster**

To adjust the brake lever span:

- Rotate the span adjuster anticlockwise to decrease the distance to the handlebar or clockwise to increase the distance from the handlebar.

Clutch Lever

A span adjuster is fitted to the clutch lever. The adjuster allows the distance from the handlebar to the lever to be changed to suit the span of the rider's hands.

Scrambler 1200 Steve McQueen Edition and Scrambler 1200 XE

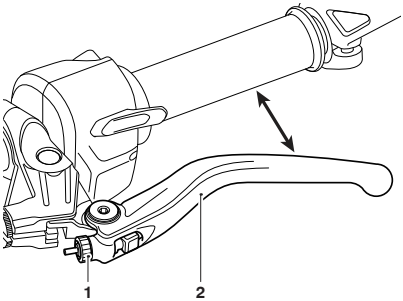

1. **Span adjuster**
2. **Clutch lever**

To adjust the clutch lever span:

- Rotate the span adjuster anticlockwise to decrease the distance to the handlebar or clockwise to increase the distance from the handlebar.
- The distance from the handlebar grip to the released lever is shortest when the adjuster wheel is adjusted fully anticlockwise.

Scrambler 1200 XC

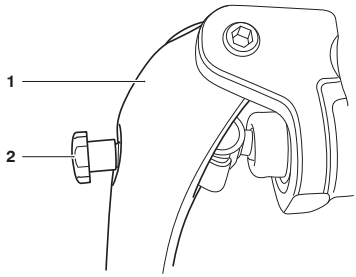

1. **Clutch lever**
2. **Span adjuster**

To adjust the clutch lever span:

- Rotate the span adjuster anticlockwise to decrease the distance to the handlebar or clockwise to increase the distance from the handlebar.

Throttle Control

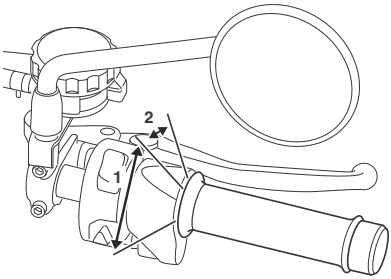

1. **Throttle open position**
2. **Throttle closed position**

All models have an electronic throttle twist grip to open and close the throttles via the engine control unit. There are no direct-acting cables in the system.

The throttle grip has a resistive feel to it as it is rolled rearwards to open the throttles. When the grip is released it will return to the throttle closed position by its internal return spring and the throttles will close.

There are no user adjustments for the throttle control.

If there is a malfunction with the throttle control the Malfunction Indicator Light (MIL) becomes illuminated and one of the following engine conditions may occur:

- MIL illuminated, restricted engine RPM and throttle movement
- MIL illuminated, limp-home mode with the engine at a fast idle condition only
- MIL illuminated, engine will not start.

For all of the conditions mentioned contact an authorised Triumph dealer as soon as possible to have the fault checked and rectified.

Warning

Reduce speed and do not continue to ride for longer than is necessary with the Malfunction Indicator Light (MIL) illuminated.

The fault may adversely affect engine performance, exhaust emissions and fuel consumption.

Reduced engine performance could cause a dangerous riding condition, leading to loss of control and an accident. Contact an authorised Triumph dealer as soon as possible to have the fault checked and rectified.

Brake Use

At low throttle opening (approximately 20°), the brakes and throttle can be used together.

At high throttle opening (greater than 20°), if the brakes are applied for more than two seconds the throttles will close and the engine speed will reduce. To return to normal throttle operation, release the throttle control, release the brakes and then re-open the throttle.

Fuel

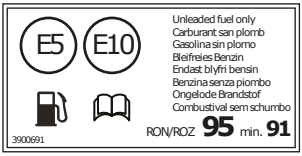

Fuel Grade

Triumph motorcycles are designed to use unleaded fuel and will give optimum performance if the correct grade of fuel is used. Always use unleaded fuel with a minimum octane rating of 91 RON.

Ethanol

In Europe, Triumph motorcycles are compatible with Ethanol E5 and E10 (5% and 10% Ethanol) unleaded fuel.

In all other markets Ethanol up to E25 (25% Ethanol) may be used.

Engine Calibration

In certain circumstances engine calibration may be required. Always refer to your authorised Triumph dealer.

Caution

The motorcycle can be permanently damaged if it is allowed to operate with the incorrect grade of fuel or incorrect engine calibration.

Always make sure the fuel used is of the correct grade and quality.

Damage caused by using the incorrect fuel or engine calibration is not considered a manufacturing defect and will not be covered under warranty.

Caution

The exhaust system for this motorcycle is fitted with a catalytic converter to help reduce exhaust emission levels.

Use of leaded fuel will damage the catalytic converter. In addition, the catalytic converter can be permanently damaged if the motorcycle is allowed to run out of fuel or if the fuel level is allowed to get very low.

Always make sure you have adequate fuel for your journey.

Note

The use of leaded fuel is illegal in some countries, states or territories.

Refuelling

Warning

To help reduce hazards associated with refuelling, always observe the following fuel safety instructions:

- Petrol (fuel) is highly flammable and can be explosive under certain conditions. When refuelling, turn the ignition switch to the OFF position.

- Do not smoke.

- Do not use a mobile telephone.

- Make sure the refuelling area is well ventilated and free from any source of flame or sparks. This includes any appliance with a pilot light.

- Never fill the tank until the fuel level rises into the filler neck. Heat from sunlight or other sources may cause the fuel to expand and overflow creating a fire hazard.

- After refuelling always check that the fuel filler cap is correctly closed.

- Because petrol (fuel) is highly flammable, any fuel leak or spillage, or any failure to observe the safety advice given above will lead to a fire hazard, which could cause damage to property, injury to persons or death.

Fuel Tank Cap

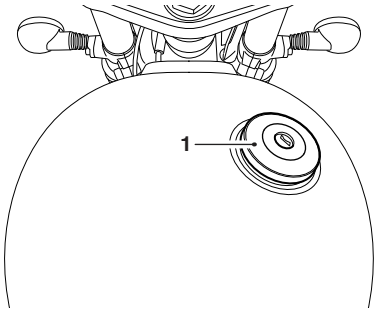

1. **Fuel tank cap**

To open the fuel tank cap:

- Remove the cover or lift up the flap.
- Insert the key into the lock and turn the key clockwise.
- Rotate the cap anticlockwise and lift clear of the tank filler neck.

To close and lock the cap:

- Align the cap to the tank filler neck and rotate the cap clockwise until the cap seals against the filler neck.
- In the fully closed position, a ratchet mechanism prevents overtightening of the cap by allowing the outer part of the cap to turn independently of the internal part.
- Turn the key anticlockwise to lock and withdraw the key.
- Replace the cover.

Filling the Fuel Tank

Warning

Overfilling the tank can lead to fuel spillage.

If fuel is spilled, thoroughly clean up the spillage immediately and dispose of the materials used safely.

Take care not to spill any fuel on the engine, exhaust pipes, tyres or any other part of the motorcycle.

Because fuel is highly flammable, any fuel leak or spillage, or any failure to observe the safety advice given above may lead to a fire hazard, which could cause damage to property and injury or death to persons.

Fuel spilled near to, or onto the tyres will reduce the tyres' ability to grip the road. This will result in a dangerous riding condition potentially causing loss of motorcycle control and an accident.

Caution

Avoid filling the tank in rainy or dusty conditions where airborne material can contaminate the fuel.

Contaminated fuel may cause damage to fuel system components.

Fill the fuel tank slowly to help prevent spillage. Do not fill the tank to a level above the bottom of the filler neck. This will make sure there is enough air space to allow for fuel expansion if the fuel inside the tank expands through absorption of heat from the engine or from direct sunlight.

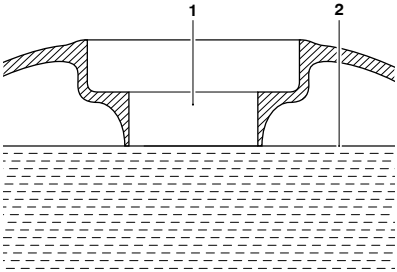

1. **Fuel filler neck**
2. **Maximum fuel level**

After refuelling always check that the fuel filler cap is correctly closed.

Side Stand

Warning

The motorcycle is fitted with an interlock system to prevent it from being ridden with the side stand in the down position.

Never attempt to ride with the side stand down or interfere with the interlock mechanism as this will cause a dangerous riding condition leading to loss of motorcycle control and an accident.

Warning

Do not lean, sit or climb on the motorcycle when it is supported on the side stand.

This may cause the motorcycle to fall over leading to motorcycle damage and an accident.

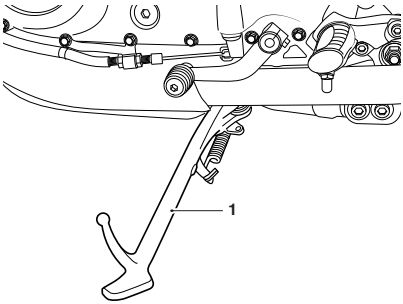

1. **Side stand**

The motorcycle is equipped with a side stand on which it can be parked. When using the side stand, always turn the handlebars fully to the left and leave the motorcycle in first gear.

Whenever the side stand is used, before riding, always make sure that the stand is fully up after first sitting on the motorcycle.

For instructions on safe parking, refer to the 'How to Ride the Motorcycle' section.

Centre Stand (if fitted)

Warning

Do not lean, sit or climb on the motorcycle when it is supported on the centre stand.

This may cause the motorcycle to fall over leading to motorcycle damage and an accident.

Caution

Do not use body panels or the seat as a handhold when placing the motorcycle on the centre stand as this will cause damage.

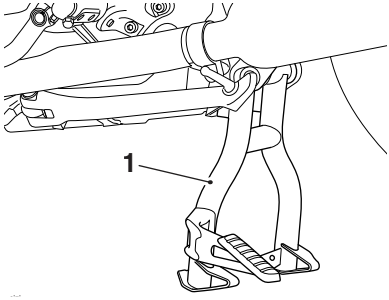

1. **Centre stand**

To set the motorcycle on the centre stand:

- Hold the motorcycle upright.
- Step down firmly on the foot finder part of the stand.
- Lift the motorcycle up and to the rear using the passenger grab rail as a handhold.

For instructions on safe parking, refer to the How to Ride the Motorcycle section.

Side Panels

The left hand side panel can be removed to gain access to the fuse box.

Left Hand Side Panel Removal

To remove the left hand side panel:

- Grasp the panel firmly and pull the panel away from the motorcycle until it is free from the three retaining grommets (leaving the grommets in place).

Left Hand Side Panel Refit

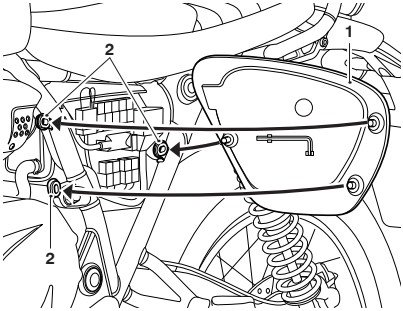

1. **Side panel (left hand side)**
2. **Grommets**

To refit the left hand side panel:

- Position the three locating dowels to the grommets, then press firmly to secure the panel.
- Finally, grasp the panel and make sure that it is fully retained.

Tool Kit

Tool Kit

The tool kit consists of an adjustment tool.

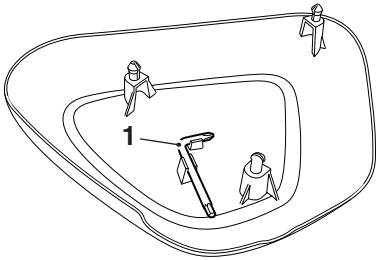

citg

1. **Adjustment tool**

The adjustment tool is attached to the inside of the right hand side panel.

Seats

Seat Care

Caution

To prevent damage to the seats or seat covers, care must be taken not to drop the seats.

Do not lean the seats against the motorcycle or any surface which may damage the seats or seat covers. Instead, place the seats, with the seat cover facing upwards, on a clean, flat surface which is covered with a soft cloth.

Do not place any item on the seats which may cause damage or staining to the seat covers.

For seat cleaning information, see page 167.

Seat Lock

Warning

To prevent detachment of the seat during riding, after fitting always grasp the seat and pull firmly upwards.

If the seat is not correctly secured in the lock, it will detach from the lock.

A loose or detached seat may cause loss of motorcycle control and an accident.

Caution

The motorcycle must not be ridden with the key in the seat lock.

Always lock the seat and remove the key before riding the motorcycle.

The seat lock is located on the left hand side of the motorcycle, on the frame below the seat.

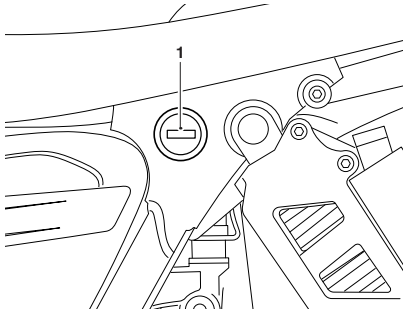

1. **Seat lock**

The seat can be removed to gain access to the storage area, battery and Owner's Handbook.

Seat Removal and Installation

Warning

To prevent detachment of the seat during riding, after fitting always grasp the seat and pull firmly upwards.

If the seat is not correctly secured in the lock, it will detach from the lock.

A loose or detached seat may cause loss of motorcycle control and an accident.

Caution

The motorcycle must not be ridden with the key in the seat lock.

Always lock the seat and remove the key before riding the motorcycle.

Seat Removal

To remove the seat:

- Insert the ignition key into the seat lock and turn it anticlockwise.
- This will release the seat from its lock.
- Slide the seat upwards and rearwards for complete removal from the motorcycle.

Seat Installation

To refit the seat:

- Engage the seat's tongue underneath the bracket near the fuel tank.
- Line up the hinges and press down at the rear to engage the seat lock.
- An audible click can be heard when the seat is fully engaged into its lock.

Seat Storage

There is a small storage compartment located on the storage tray underneath the seat. The seat storage compartment may be used to store electrical devices when using the USB socket, and small items when riding.

Caution

Loose and unsecured items in the storage compartment may get damaged or cause damage to the motorcycle.

Make sure there is sufficient space surrounding any electronic devices or other items for the seat to close without causing any damage to the items or the motorcycle.

Secure all electronic devices, cables and any other items safely in the storage compartment before riding.

Universal Serial Bus (USB) Socket

Warning

The USB socket is not waterproof unless the waterproof cap is installed. Do not connect electronic devices whilst it is raining.

Water in the USB socket could lead to an electrical problem, resulting in motorcycle damage, loss of motorcycle control and an accident.

Caution

Do not leave the ignition switch in the ON position unless the engine is running as this will discharge the battery.

Caution

Always make sure that all electronic devices and cables are safely secured under the seat when riding.

Always make sure there is sufficient space surrounding any electronic devices for the seat to close without causing any damage to the electronic device or the motorcycle.

The Universal Serial Bus (USB) socket allows a 5 Volt USB connection for charging electronic devices such as mobile phones, cameras and GPS devices. Loads up to two Amps can be connected to the USB socket.

To access the USB socket:

- Remove the seat (see page 86).
- The USB socket is located in the storage tray on top of the battery.
- Remove the cap.
- Plug the relevant USB adaptor cable into the socket. Adaptor cables are not supplied with the motorcycle.

Running-In

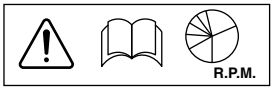

Running-in is the name given to the process that occurs during the first hours of a new vehicle's operation.

In particular, internal friction in the engine will be higher when components are new. Later on, when continued operation of the engine has ensured that the components have 'bedded in', this internal friction will be greatly reduced.

A period of careful running-in will ensure lower exhaust emissions, and will optimise performance, fuel economy and longevity of the engine and other motorcycle components.

During the first 500 miles (800 km):

- Do not use full throttle;
- Avoid high engine speeds at all times;
- Avoid riding at one constant engine speed, whether fast or slow, for a long period of time;
- Avoid aggressive starts, stops and rapid accelerations, except in an emergency;
- Do not ride at speeds greater than 3/4 of maximum speed.

From 500 to 1,000 miles (800 to 1,600 km):

- Engine speed can gradually be increased to the rev limit for short periods.

Both during and after running-in has been completed:

- Do not overrev the engine when cold;
- Do not let the engine labour. Always downshift before the engine begins to 'struggle';
- Do not ride with engine speeds unnecessarily high. Changing up a gear helps reduce fuel consumption, reduces noise and helps to protect the environment.

Daily Safety Checks

DAILY SAFETY CHECKS AND SEAT CARE
CONTRÔLES DE SÉCURITÉ QUOTIDIEN ET NETTOYAGE DE LA SELLE
COMPROBACIONES DIARIAS Y EL MANTENIMIENTO DE SU ASIENTO
DAGELIJKSE VEILIGHEIDSCONTROLES EN ZADELONDERHOUD
TÄGLICHE SICHERHEITSKONTROLLEN UND PFLEGE DES SITZES
DAGLIGA SÄKERHETSKONTROLLER OCH VÅRD AV SADEL
CONTROLLI DI SICUREZZA GIORNALIERI E PULIZIA SELLA
日常安全点検とシートのお手入れ

Warning

Failure to perform these checks every day before you ride may result in serious motorcycle damage or an accident causing serious injury or death.

Check the following items each day before you ride. The time required is minimal, and these checks will help ensure a safe, reliable ride.

If any irregularities are found during these checks, refer to the Maintenance and Adjustment section or see your authorised Triumph dealer for the action required to return the motorcycle to a safe operating condition.

Check:

Fuel: Adequate supply in tank, no fuel leaks (see page 82).

Engine Oil: Correct level on dipstick or shown in sight glass. Add correct specification oil as required. No leaks from the engine or oil cooler (see page 114).

Drive Chain: Correct adjustment (see page 124).

Tyres/Wheels: Correct inflation pressures (when cold). Tread depth/ wear, tyre/wheel damage, loose/broken spokes, punctures etc. (see page 146).

Nuts, Bolts, Fasteners: Visually check that steering and suspension components, axles, and all controls are properly tightened or fastened. Inspect all areas for loose/damaged fixings.

Steering Action: Smooth but not loose from lock to lock. No binding of any of the control cables (see page 137).

Brakes: Pull the brake lever and push the brake pedal to check for correct resistance. Investigate any lever/pedal where the travel is excessive before meeting resistance, or if either control feels spongy in operation (see page 128).

Brake Pads: Check that the correct amount of friction material is remaining on all the brake pads (see page 128).

Brake Fluid Levels: No brake fluid leakage. Brake fluid levels must be between the MAX and MIN marks on both reservoirs (see page 130).

Front Forks: Smooth action. No fork oil leakage (see page 142).

Throttle: Make sure that the throttle grip returns to the idle position without sticking (see page 122).

Clutch: Smooth operation and correct cable free play (see page 123).

Coolant: No coolant leakage. Check the coolant level in the expansion tank (when the engine is cold) (see page 120).

Electrical Equipment: All lights and horn function correctly (see page 65).

Engine Stop: Engine start/stop switch turns the engine OFF when the switch is moved to the STOP position (see page 63).

Stands: Returns to the fully up position by spring tension. Return springs not weak or damaged (see page 83).

Table of Contents

Stopping the Engine 92
Starting the Engine 92
Moving Off 93
Changing Gears 94
Braking 95
    Anti-lock Braking System (ABS) 97
    Optimised Cornering ABS 98
Parking 100
Considerations for High Speed Operation 101

Stopping the Engine

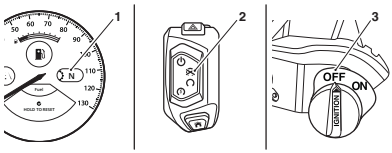

1. **Neutral indicator**
2. **Engine stop switch - STOP position**
3. **Master ignition switch - OFF position (if fitted)**

To stop the engine:

- Close the throttle completely.
- Select neutral.
- Place the engine stop switch in the STOP position.
- Turn the master ignition switch to the OFF position (if fitted).
- Select first gear.
- Support the motorcycle on a firm, level surface with the side or centre stand.
- Lock the steering.

Caution

Do not leave the ignition switched on with the engine stopped. This will cause electrical damage.

Starting the Engine

Warning

Never start the engine or run the engine in a confined area.

Exhaust fumes are poisonous and can cause loss of consciousness and death within a short period of time.

Always operate the motorcycle in the open air or in an area with adequate ventilation.

Caution

The low oil pressure warning light should go out shortly after the engine starts.

If the low oil pressure warning light stays on after starting the engine, stop the engine immediately and investigate the cause.

Running the engine with low oil pressure will cause severe engine damage.

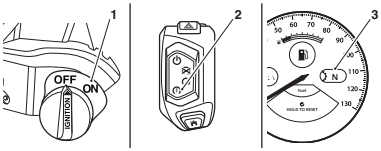

1. **Master ignition switch - ON position (if fitted)**
2. **Engine stop switch - QUICKSTART position**
3. **Neutral indicator**

To start the engine:

- Make sure that the master ignition switch (if fitted) is turned to the ON position.
- Pull the clutch lever fully into the handlebar.
- Press and hold the QUICK START position on the engine start/stop switch until the engine starts.
- Check that the engine stop switch is in the RUN position.
- Make sure the transmission is in neutral.

The motorcycle is equipped with starter lockout switches. The switches prevent the electric starter from operating when the transmission is not in neutral with the side stand down.

If the side stand is extended whilst the engine is running, and the transmission is not in neutral then the engine will stop regardless of the clutch lever position.

Moving Off

To move the motorcycle:

- Pull in the clutch lever and select first gear.
- Open the throttle a little and let out the clutch lever slowly.
- As the clutch starts to engage, open the throttle a little more, allowing enough engine speed to avoid stalling.

Changing Gears

Warning

Take care to avoid opening the throttle too far or too fast in any of the lower gears as this can lead to the front wheel lifting from the ground (pulling a 'wheelie') and to the rear tyre breaking traction (wheel spin).

Always open the throttle cautiously, particularly if you are unfamiliar with the motorcycle, as a 'wheelie' or loss of traction will cause loss of motorcycle control and an accident.

Warning

Do not change to a lower gear at speeds that will cause excessive engine rpm (r/min).

This can lock the rear wheel causing loss of control and an accident. Engine damage may also be caused.

Changing down should be done such that low engine speeds will be ensured.

The gear change mechanism is the 'positive stop' type. This means that, for each movement of the gear change pedal, you can only select each gear, one after the other, in ascending or descending order.

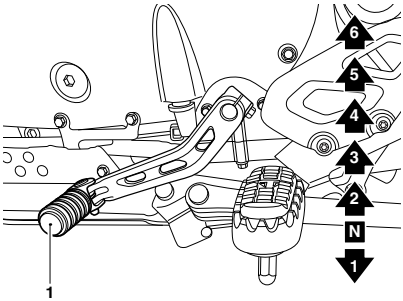

1. Gear change pedal (6 speed shown)

To change gear:

- Close the throttle while pulling in the clutch lever.
- Change into the next higher or lower gear.
- Open the throttle part way, while releasing the clutch lever. Always use the clutch when changing gear.

Braking

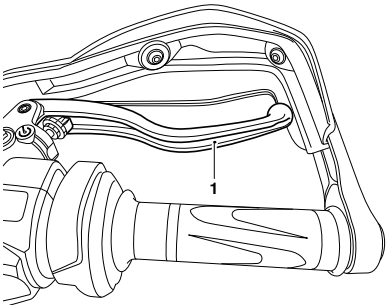

1. **Front brake lever**

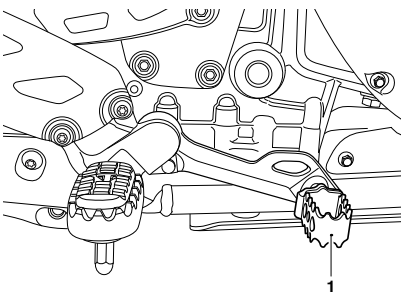

1. **Rear brake pedal**

The rear brake pedal on the Scrambler 1200 Steve McQueen Edition and the Scrambler 1200 XE motorcycles is height adjustable. For more information, see page 134.

Warning

WHEN BRAKING, OBSERVE THE FOLLOWING:

- Close the throttle completely, leaving the clutch engaged to allow the engine to help slow down the motorcycle.

- Change down one gear at a time such that the transmission is in first gear when the motorcycle comes to a complete stop.

- When stopping, always apply both brakes at the same time. Normally the front brake should be applied a little more than the rear.

- Change down or fully disengage the clutch as necessary to keep the engine from stalling.

- Never lock the brakes, as this may cause loss of control of the motorcycle and an accident.

Warning

For emergency braking, disregard down changing, and concentrate on applying the front and rear brakes as hard as possible without skidding. Riders should practice emergency braking in a traffic-free area.

Triumph strongly recommends that all riders take a course of instruction, which includes advice on safe brake operation. Incorrect brake technique could result in loss of control and an accident.

Warning

For your safety, always exercise extreme caution when braking, accelerating or turning as any incautious action can cause loss of control and an accident. Independent use of the front or rear brakes reduces overall braking performance. Extreme braking may cause either wheel to lock, reducing control of the motorcycle and causing an accident (see ABS warnings).

When possible, reduce speed or brake before entering a turn as closing the throttle or braking in mid-turn may cause wheel slip leading to loss of control and an accident.

When riding in wet or rainy conditions, or on loose surfaces, the ability to manoeuvre and stop will be reduced. All of your actions should be smooth under these conditions. Sudden acceleration, braking or turning may cause loss of control and an accident.

Warning

When descending a long, steep gradient or mountain pass, make use of the engine's braking effect by down changing and use both front and rear brakes intermittently.

Continuous brake application or use of the rear brake only can overheat the brakes and reduce their effectiveness leading to loss of motorcycle control and an accident.

Warning

Riding with your foot on the brake pedal or your hands on the brake lever may actuate the brake light, giving a false indication to other road users.

It may also overheat the brake, reducing braking effectiveness leading to loss of motorcycle control and an accident.

Warning

Do not coast with the engine switched off, and do not tow the motorcycle.

The transmission is pressure lubricated only when the engine is running.

Inadequate lubrication may cause damage or seizure of the transmission, which can lead to sudden loss of motorcycle control and an accident.

Anti-lock Braking System (ABS)

Warning

ABS prevents the wheels from locking, therefore maximising the effectiveness of the braking system in emergencies and when riding on slippery surfaces. The potentially shorter braking distances ABS allows under certain conditions are not a substitute for good riding practice.

Always ride within the legal speed limit.

Never ride without due care and attention and always reduce speed in consideration of weather, road and traffic conditions.

Take care when cornering. If the brakes are applied in a corner, ABS will not be able to counteract the weight and momentum of the motorcycle. This can result in loss of control and an accident.

Under some circumstances it is possible that a motorcycle equipped with ABS may require a longer stopping distance.

Warning

If the ABS is not functioning then the brake system will continue to function as a non-ABS braking system.

Do not continue to ride for longer than is necessary with the warning light illuminated. In the event of a fault, contact an authorised Triumph dealer as soon as possible to have the fault checked and rectified.

In this situation, braking too hard will cause the wheels to lock resulting in loss of motorcycle control and an accident.

Warning

After riding off-road with ABS disabled, always make sure that the ABS is enabled when returning to ride on public roads.

Riding on public roads with the ABS disabled will, if braking too hard, cause the wheels to lock resulting in loss of motorcycle control and an accident.

Note

The ABS operation may feel like a harder pedal pressure or a pulsation of the brake lever and pedal.

The ABS is not an integrated braking system and does not control both the front and rear brake at the same time so this pulsation may be felt in the lever, the pedal or both.

The ABS may be activated by sudden upward or downward changes in the road surface.

ABS Warning Light

When the ignition switch is turned to the ON position, it is normal that the ABS warning light will flash on and off. The light will continue to flash after engine start-up until the motorcycle first reaches a speed exceeding 6 mph (10 km/h) when it will go off.

The warning light will not illuminate again until the engine is restarted unless there is a fault.

If there is a fault with the ABS system the warning light will be illuminated and the general warning symbol will flash.

Warning

The ABS warning light will illuminate when the rear wheel is driven at high speed for more than 30 seconds when the motorcycle is on a stand. This reaction is normal.

When the ignition is switched off and the motorcycle is restarted, the warning light will illuminate until the motorcycle reaches a speed exceeding 19 mph (30 km/h).

Warning

The ABS system operates by comparing the relative speed of the front and rear wheels.

Use of non-recommended tyres can affect wheel speed and cause the ABS function not to operate, potentially leading to loss of control and an accident in conditions where the ABS would normally function.

Optimised Cornering ABS

Scrambler 1200 Steve McQueen Edition and Scrambler 1200 XE models ONLY

The optimised cornering ABS is a system designed to give the rider increased control should the ABS be activated whilst the motorcycle is leaning in a corner.

A sensor constantly monitors the lean angle of the motorcycle. If the motorcycle is leaning in a corner and the ABS is activated, the system will use the lean angle measurement to apply the ABS in a manner most suitable to help the rider maintain motorcycle control.

Warning

The optimised cornering ABS is a system designed to help the rider in emergency braking situations.

The system is designed to give the rider increased control should the ABS be activated whilst the motorcycle is leaning in a corner.

The potential increased control that the optimised cornering braking system allows under certain conditions is not a substitute for good riding practice.

Warning

Always ride within the legal speed limit. Never ride without due care and attention and always reduce speed in consideration of weather, surface and traffic conditions. Take care when cornering.

If the motorcycle is leaning in a corner and the ABS is activated, the optimised cornering ABS will use the lean angle measurement from a sensor to apply the ABS to assist the rider to maintain motorcycle control. The optimised cornering ABS will not however be able to fully counteract the weight and momentum of the motorcycle and braking too hard whilst cornering may result in loss of motorcycle control and an accident.

Under some circumstances it is possible that a motorcycle equipped with optimised cornering ABS may require a longer stopping distance than an equivalent motorcycle without ABS, or an equivalent motorcycle equipped with ABS but not equipped with optimised cornering ABS.

Warning

If the optimised cornering ABS is not functioning, the ABS warning light will illuminate and a warning message is shown in the display.

In this situation, the ABS will continue to operate but without the optimised cornering function, provided that:

- There are no other ABS faults.

- The ABS has not been disabled by the rider.

Do not continue to ride for longer than is necessary with the warning light illuminated. In the event of a fault, contact an authorised Triumph dealer as soon as possible to have the fault checked and rectified.

In this situation, braking too hard during cornering may result in loss of motorcycle control and an accident.

Parking

Warning

Petrol is extremely flammable and can be explosive under certain conditions.

If parking inside a garage or other structure, be sure it is well ventilated and the motorcycle is not close to any source of flame or sparks. This includes any appliance with a pilot light.

Failure to follow the above advice may cause a fire resulting in damage to property or personal injury.

Warning

The engine and exhaust system will be hot after riding.

DO NOT park where pedestrians and children are likely to touch the motorcycle.

Touching any part of the engine or exhaust system when hot may cause unprotected skin to become burnt.

Warning

Do not park on a soft or on a steeply inclined surface.

Parking under these conditions may cause the motorcycle to fall over causing damage to property and personal injury.

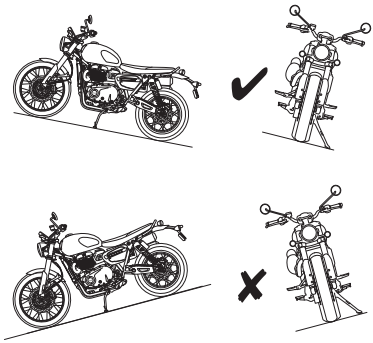

To park the motorcycle:

- Select neutral and turn the ignition switch to the OFF position.
- Lock the steering to help prevent theft.
- Always park on a firm, level surface to prevent the motorcycle from falling.
- When parking on a hill, always park facing uphill to prevent the motorcycle from rolling off the stand. Engage first gear to prevent the motorcycle from moving.
- On a lateral (sideways) incline, always park such that the incline naturally pushes the motorcycle towards the side stand.
- Do not park on a lateral (sideways) incline of greater than 6° and never park facing downhill.
- Make sure that the side stand is fully retracted before riding off.

Considerations for High Speed Operation

Warning

This Triumph motorcycle should be operated within the legal speed limits for the particular road travelled.

Operating a motorcycle at high speeds can be potentially dangerous since the time available to react to given traffic situations is greatly reduced as road speed increases.

Always reduce speed in potentially hazardous driving conditions such as bad weather or heavy traffic.

Warning

Only operate this Triumph motorcycle at high speed in closed-course, on-road competition or on closed-course racetracks.

High speed operation should only then be attempted by riders who have been instructed in the techniques necessary for high speed riding and are familiar with the motorcycle's characteristics in all conditions.

High speed operation in any other circumstances is dangerous and will lead to loss of motorcycle control and an accident.

Warning

The handling characteristics of a motorcycle at high speed may vary from those you are familiar with at legal road speeds.

Do not attempt high speed operation unless you have received sufficient training and have the required skills as a serious accident may result from incorrect operation.

Warning

The items listed below are extremely important and must never be neglected. A problem, which may not be noticed at normal operating speeds, may be greatly exaggerated at high speeds.

General

Make sure that the motorcycle has been maintained according to the scheduled maintenance chart.

Brakes

Check that the front and rear brakes are functioning correctly.

Coolant

Check that the coolant level is at the upper level line in the expansion tank. Always check the level with the engine cold.

Electrical Equipment

Make sure that all electrical equipment such as the headlight, rear/brake light, direction indicators and horn all work correctly.

Engine Oil

Check that the engine oil level is correct. Make sure that the correct grade and type of oil is used when topping up.

Drive Chain

Make sure that the drive chain is correctly adjusted and lubricated. Inspect the chain for wear and damage.

Fuel

Have sufficient fuel for the increased fuel consumption that will result from high speed operation.

⚠ Caution

In many countries, the exhaust system for this model is fitted with a catalytic converter to help reduce exhaust emission levels.

The catalytic converter can be permanently damaged if the motorcycle is allowed to run out of fuel or if the fuel level is allowed to get very low.

Always make sure you have adequate fuel for your journey.

Luggage

Make sure that any luggage containers are closed, locked and securely fitted to the motorcycle.

Miscellaneous

Visually check that all fixings are tight.

Steering

Check that the handlebar turns smoothly without excessive free play or tight spots. Make sure that the control cables do not restrict the steering in any way.

Tyres

High speed operation is hard on tyres, and tyres that are in good condition are crucial to riding safely. Examine their overall condition, inflate to the correct pressure (when the tyres are cold), and check the wheel balance. Securely fit the valve caps after checking tyre pressures. Observe the information given in the maintenance and specification sections on tyre checking and tyre safety.

The addition of accessories and carriage of additional weight can affect the motorcycle's handling characteristics causing changes in stability and necessitating a reduction in speed. The following information has been prepared as a guide to the potential hazards of adding accessories to a motorcycle and carrying passengers and additional loads.

Accessories

Warning

Do not install accessories or carry luggage that impairs the control of the motorcycle.

Make sure that you have not adversely affected any lighting component, road clearance, banking capability (i.e. lean angle), control operation, wheel travel, front fork movement, visibility in any direction, or any other aspect of the motorcycle's operation.

Warning

Fit only genuine Triumph accessories to the correct Triumph motorcycle model.

Always check the Triumph Fitting Instruction associated with the genuine Triumph accessory. Make sure the Triumph motorcycle model that the Triumph accessory is to be fitted to, is listed as approved for the genuine Triumph accessory. For all Triumph Fitting Instructions, see www.triumphinstructions.com.

Never fit genuine Triumph accessories to a Triumph motorcycle model that is not listed in the associated Triumph Fitting Instruction, as this may affect handling, stability or other aspects of the motorcycle operation that may result in an accident causing severe injuries or death.

Warning

Never ride an accessory equipped motorcycle, or a motorcycle carrying a payload of any kind, at speeds above 80 mph (130 km/h). In either/both of these conditions, speeds in excess of 80 mph (130 km/h) should not be attempted even where the legal speed limit permits this.

The presence of accessories and/or payload will cause changes in the stability and handling of the motorcycle.

Failure to allow for changes in motorcycle stability may lead to loss of motorcycle control and an accident. When riding at high speed, always be aware that various motorcycle configuration and environmental factors can adversely affect the stability of your motorcycle. For example:

- Incorrectly balanced loads on both sides of the motorcycle

- Incorrectly adjusted front and rear suspension settings

- Incorrectly adjusted tyre pressures

- Excessively or unevenly worn tyres

- Side winds and turbulence from other vehicles

- Loose clothing.

Remember that the 80 mph (130 km/h) absolute limit will be reduced by the fitting of non-approved accessories, incorrect loading, worn tyres, overall motorcycle condition and poor road or weather conditions.

Loading

The total weight of the rider, and any passenger, accessories and luggage must not exceed the maximum load limit stated in the Specifications section.

Warning

Always make sure that any loads carried are evenly distributed on both sides of the motorcycle. Make sure that the load is correctly secured so that it will not move around while the motorcycle is in motion.

Evenly distribute the load within each pannier (if fitted). Pack heavy items at the bottom and on the inboard side of the pannier.

Always check the load security regularly (though not while the motorcycle is in motion) and make sure that the load does not extend beyond the rear of the motorcycle.

Never exceed the maximum vehicle loading weight as specified in the Specifications section.

This maximum loading weight is made up from the combined weight of the rider, passenger, any accessories fitted and any load carried.

For models that have adjustable suspension settings, make sure that front and rear spring preload and damping settings are suitable for the loading condition of the motorcycle. Note the maximum permissible payload for the panniers is stated on a label inside the pannier.

Incorrect loading may result in an unsafe riding condition leading to an accident.

Warning

If the passenger seat or luggage rack (if fitted) is used to carry small objects, they must not exceed a total maximum weight of 2 kg (4 lbs).

This total weight (combined on the seat and luggage rack if fitted), must not impair control of the motorcycle, must be securely attached and must not extend beyond the rear or sides of the motorcycle.

Carriage of objects in excess of the above weights, that are insecure, impair control or extend beyond the rear or sides of the motorcycle may lead to loss of motorcycle control and an accident.

Even if small objects are correctly loaded onto the rear seat, the maximum speed of the motorcycle must be reduced to 80 mph (130 km/h).

Warning

Never attempt to store any items between the frame and the fuel tank.

This can restrict the steering and will cause loss of control leading to an accident.

Weight attached to the handlebar or front fork will increase the mass of the steering assembly and can result in loss of steering control leading to an accident.

Passengers

Warning

Your passenger should be instructed that he or she can cause loss of motorcycle control by making sudden movements or by adopting an incorrect seated position.

The rider should instruct the passenger as follows:

- It is important that the passenger sits still while the motorcycle is in motion and does not interfere with the operation of the motorcycle.

- To keep his or her feet on the passenger footrests and to firmly hold onto either the seat strap or grab rails (if fitted) or the rider's waist or hips.

- Advise the passenger to lean with the rider when travelling around corners and not to lean unless the rider does so.

Warning

Do not carry a passenger unless he or she is tall enough to reach the footrests provided.

A passenger who is not tall enough to reach the footrests will be unable to sit securely on the motorcycle and may cause instability leading to loss of control and an accident.

Warning

The handling and braking capabilities of a motorcycle will be affected by the presence of a passenger.

The rider must make allowances for these changes when operating the motorcycle with a passenger and should not attempt such operation unless trained to do so and without becoming familiar and comfortable with the changes in motorcycle operating characteristics that this brings about.

Motorcycle operation without making allowances for the presence of a passenger could lead to loss of motorcycle control and an accident.

Warning

Do not carry animals on your motorcycle.

An animal could make sudden and unpredictable movements that could lead to loss of motorcycle control and an accident.

Table of Contents

Scheduled Maintenance 109
Scheduled Maintenance Table 111
Engine Oil 114
Engine Oil Level Inspection 114
Engine Oil and Oil Filter Change 116
Disposal of Used Engine Oil and Oil Filters 117
Engine Oil Specification and Grade (10W/40 & 10W/50) 118
Cooling System 118
Coolant Level Inspection 120
Coolant Level Adjustment 120
Coolant Change 121
Throttle Control 122
Throttle Inspection 122
Clutch 123
Clutch Inspection 123
Clutch Adjustment 123
Drive Chain 124
Drive Chain Lubrication 125
Drive Chain Free Movement Inspection 125
Drive Chain Free Movement Adjustment 126
Drive Chain and Sprocket Wear Inspection 127
Brakes 128
Breaking-in New Brake Pads and Discs 129
Brake Pad Wear Compensation 129
Disc Brake Fluid 130
Front Brake Fluid Level Inspection and Adjustment 131
Rear Brake Fluid Level Inspection 132
Rear Brake Fluid Level Adjustment 132
Rear Brake Pedal Adjustment 134
Brake Light Switches 134
Mirrors 135
Handlebars 135
Steering/Wheel Bearings 137
Steering Inspection 137
Wheel Bearings Inspection 138

MAINTENANCE AND ADJUSTMENT

Front Suspension 139
- Front Suspension Settings 139
- Front Suspension Spring Preload Adjustment 140
- Front Suspension Compression and Rebound Damping Adjustment 141
- Front Fork Inspection 142

Rear Suspension 143
- Rear Suspension Settings 143
- Rear Suspension Spring Preload Adjustment 144
- Rear Suspension Rebound Damping Adjustment 145
- Rear Suspension Compression Damping Adjustment 145

Bank Angle Indicators 146

Tyres 146
- Tyre Inflation Pressures 147
- Tyre Pressure Monitoring System (TPMS) (if fitted) 148
- Tyre Wear 148
- Minimum Recommended Tread Depth 149
- Tyre Replacement 149

Battery 152
- Battery Removal 152
- Battery Disposal 153
- Battery Maintenance 153
- Battery Discharge 154
- Battery Discharge During Storage and Infrequent Use of the Motorcycle 154
- Battery Charging 155
- Battery Installation 156

Fuses 157

Headlights 158
- Headlights 158
- Headlight Adjustment 159

Rear Light 159

Multifunctional Rear Lights (if fitted) 159

Direction Indicator Lights 160

License Plate Light 160

Scheduled Maintenance

Warning

Triumph Motorcycles cannot accept any responsibility for damage or injury resulting from incorrect maintenance or improper adjustment carried out by the owner.

Incorrect or neglected maintenance can lead to a dangerous riding condition.

Always have an authorised Triumph dealer carry out the scheduled maintenance of this motorcycle.

Warning

All maintenance is vitally important and must not be neglected. Incorrect maintenance or adjustment may cause one or more parts of the motorcycle to malfunction. A malfunctioning motorcycle may lead to loss of control and an accident.

Weather, terrain and geographical location affect maintenance. The maintenance schedule should be adjusted to match the particular environment in which the motorcycle is used and the demands of the individual owner.

Special tools, knowledge and training are required in order to correctly carry out the maintenance items listed in the scheduled maintenance chart. Only an authorised Triumph dealer will have this knowledge and equipment.

Incorrect or neglected maintenance can lead to a dangerous riding condition. Always have an authorised Triumph dealer carry out the scheduled maintenance of this motorcycle.

To maintain the motorcycle in a safe and reliable condition, the maintenance and adjustments outlined in this section must be carried out as specified in the schedule of daily checks, and also in line with the scheduled maintenance chart. The information that follows describes the procedures to follow when carrying out the daily checks and some simple maintenance and adjustment items.

Scheduled maintenance may be carried out by your authorised Triumph dealer in three ways; annual maintenance, mileage based maintenance or a combination of both, depending on the mileage the motorcycle travels each year.

1. Motorcycles travelling less than 10,000 miles (16,000 km) per year must be maintained annually. In addition to this, mileage based items require maintenance at their specified intervals, as the motorcycle reaches this mileage.
2. Motorcycles travelling approximately 10,000 miles (16,000 km) per year must have the annual maintenance and the specified mileage based items carried out together.
3. Motorcycles travelling more than 10,000 miles (16,000 km) per year must have the mileage based items maintained as the motorcycle reaches the specified mileage. In addition to this, annual based items will require maintenance at their specified annual intervals.

In all cases maintenance must be carried out at or before the specified maintenance intervals shown. Consult an authorised Triumph dealer for advice on which maintenance schedule is most suitable for your motorcycle.

Triumph Motorcycles cannot accept any responsibility for damage or injury resulting from incorrect maintenance or improper adjustment.

Service Symbol/General Warning Symbol

The service symbol will illuminate for five seconds after the motorcycle start up sequence as a reminder that a service is due in approximately 60 miles (100 km). The service symbol will illuminate permanently when the mileage is reached, it will remain permanently illuminated until the service interval is reset using the Triumph Diagnostic tool.

The general warning symbol will flash if an ABS or engine management fault has occurred and the ABS and/or MIL warning lights are illuminated. Contact an authorised Triumph dealer as soon as possible to have the fault checked and rectified.

Scheduled Maintenance Table

Operation Description	Odometer Reading in Miles (Km) or Time Period, whichever comes first					
		First Service	Annual Service	Mileage Based Service		
	Every	600 (1000) 6 month	Year	10,000 and 30,000 (16,000 and 48,000)	20,000 (32,000)	40,000 (64,000)
Lubrication						
Engine - check for leaks	Day	•	•	•	•	•
Engine oil - renew	-	•	•	•	•	•
Engine oil filter - renew	-	•	•	•	•	•
Fuel System and Engine Management						
Fuel system - check for leaks	-	•	•	•	•	•
Fuel system - check fuel hoses for chafing, cracks or damage. Replace if necessary	-			•	•	•
Air filter - renew	-			•	•	•
Fuel filter - renew	-				•	•
Ignition System						
Spark plugs - renew	-				•	•
Cooling System						
Cooling system - check for leaks	Day	•	•	•	•	•
Cooling system - check hoses for chafing, cracks or damage. Replace if necessary	-			•	•	•
Coolant level - check/adjust	Day	•	•	•	•	•
Coolant - renew	Every 3 years regardless of mileage					
Engine						
Clutch - check operation	Day	•	•	•	•	•
Clutch cable - check function and adjust as necessary	Day	•	•	•	•	•
Clutch lever pivot - clean/grease	-		•	•	•	•
Valve clearances - check/adjust	-				•	•
Camshaft timing - check/adjust	-				•	•

Operation Description	Odometer Reading in Miles (Km) or Time Period, whichever comes first					
		First Service	Annual Service	Mileage Based Service		
	Every	600 (1000) 6 month	Year	10,000 and 30,000 (16,000 and 48,000)	20,000 (32,000)	40,000 (64,000)
Wheels and Tyres						
Wheels - inspect for damage	Day	•	•	•	•	•
Wheel bearings - check for wear/smooth operation	-	•	•	•	•	•
Wheels - check for broken or damaged spokes and check spoke tightness (not alloy wheels)	Day	•	•	•	•	•
Tyre wear/tyre damage - check	Day	•	•	•	•	•
Tyre pressures - check/adjust	Day	•	•	•	•	•
Steering and Suspension						
Steering - check for free operation	Day	•	•	•	•	•
Headstock bearings - check/adjust	-		•	•	•	•
Front and rear suspension - check for damage/leaks/smooth operation	Day	•	•	•	•	•
Fork oil - renew	-					•
Brakes						
Brakes - check operation	Day	•	•	•	•	•
Brake pads - check wear levels	Day	•	•	•	•	•
Brake fluid levels - check	Day	•	•	•	•	•
Rear brake pedal adjuster pivot pin - clean/ lubricate	-	•	•	•	•	•
Brake fluid - renew	Every 2 years regardless of mileage					
Final Drive						
Drive chain slack - check/adjust	Day	•	•	•	•	•
Drive chain - wear check	Every 500 miles (800 km)					
Drive chain - lubricate	Every 200 miles (300 km)					
Drive chain rubbing strip - check for wear, cracks or damage. Replace if necessary	-	•	•	•	•	•
Electrical						
Lights, instruments and electrical systems - check/adjust	Day	•	•	•	•	•

Operation Description	Odometer Reading in Miles (Km) or Time Period, whichever comes first					
		First Service	Annual Service	Mileage Based Service		
	Every	600 (1000) 6 month	Year	10,000 and 30,000 (16,000 and 48,000)	20,000 (32,000)	40,000 (64,000)
General						
Autoscan - Carry out a full Autoscan using the Triumph Diagnostic Tool (print a customer copy)	-	•	•	•	•	•
Engine ECM, Instruments and Keyless ECM - check for latest calibration download using the Triumph diagnostic tool	-	•	•	•	•	•
Bank angle indicators - check for wear	Day	•	•	•	•	•
Centre stand and/or side stand - check for wear/smooth operation	Day	•	•	•	•	•
Carry out all outstanding Service Bulletin and warranty work	-	•	•	•	•	•
Carry out road test	-	•	•	•	•	•
Complete the service record book and reset the service indicator (if fitted)	-	•	•	•	•	•

Engine Oil

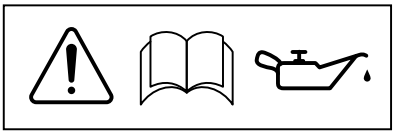

Warning

Motorcycle operation with insufficient, deteriorated, or contaminated engine oil will cause accelerated engine wear and may result in engine or transmission seizure.

Seizure of the engine or transmission may lead to sudden loss of motorcycle control and an accident.

In order for the engine, transmission, and clutch to function correctly, maintain the engine oil at the correct level, and change the engine oil and oil filter in accordance with scheduled maintenance requirements.

Engine Oil Level Inspection

Warning

Never start the engine or run the engine in a confined area.

Exhaust fumes are poisonous and can cause loss of consciousness and death within a short period of time.

Always operate the motorcycle in the open air or in an area with adequate ventilation.

Warning

If the engine has recently been running, the exhaust components may be hot to the touch.

Contact with the hot components may cause damage to exposed skin.

To avoid skin damage, always allow the hot parts to cool before touching the exhaust system.

Caution

Running the engine with insufficient engine oil will cause engine damage.

If the low oil pressure indicator remains on, stop the engine immediately and investigate the situation.

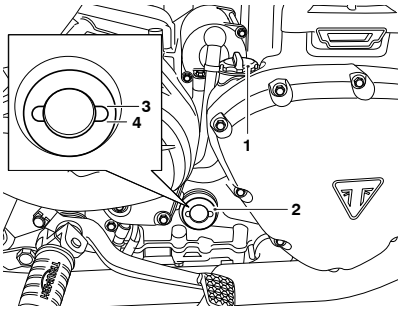

1. **Filler plug**
2. **Sight glass**
3. **Maximum limit**
4. **Minimum limit**

To inspect the engine oil level:

- Start the engine and run at idle for approximately five minutes. Stop the engine and wait for at least three minutes to allow the engine oil to settle.
- Note the engine oil level visible in the sight glass.
- When correct, engine oil should be visible in the sight glass at a point midway between the upper (maximum) and lower (minimum) markings on the sight glass.

Note

An accurate indication of the level of engine oil in the engine is only shown when the engine is at normal operating temperature and the motorcycle is upright (not on the side stand).

- If it is necessary to top up the engine oil level, remove the filler plug and add engine oil, a little at a time, until the level registered in the sight glass is correct.

⚠ Caution

Make sure no foreign matter or contamination enters the engine during an engine oil change or top up. Contamination entering the engine may lead to engine damage.

- Once the correct level is reached, fit and tighten the filler plug.

Engine Oil and Oil Filter Change

Warning

Prolonged or repeated contact with engine oil can lead to skin dryness, irritation and dermatitis.

Used engine oil contains harmful contamination that can lead to skin cancer.

Always wear suitable protective clothing and avoid skin contact with used oil.

Warning

The oil may be hot to the touch.

Avoid contact with the hot oil by wearing suitable protective clothing, gloves, eye protection, etc.

Contact with hot oil may cause the skin to be scalded or burned.

Warning

If the engine has recently been running, the exhaust system will be hot.

Before working on or near the exhaust system, allow sufficient time for the exhaust system to cool as touching any part of a hot exhaust system could cause burn injuries.

The engine oil and filter must be renewed in accordance with scheduled maintenance requirements.

To change the engine oil and filter:

- Warm up the engine thoroughly then stop the engine. Secure the motorcycle on the side stand.
- Allow the engine oil to settle for five minutes before draining.
- Place an oil drain pan beneath the engine.

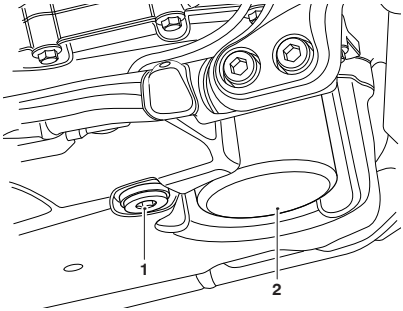

1. **Sump plug**
2. **Engine oil filter**

- Remove the sump plug from the bottom of the sump and allow the engine oil to drain.
- Secure the motorcycle in an upright position on level ground.
- Position the oil drain pan beneath the engine oil filter.
- Unscrew and remove the engine oil filter using the Triumph service tool T3880313. Dispose of the old filter in an environmentally friendly way.
- Prefill the replacement engine oil filter with new engine oil.
- Apply a smear of clean engine oil to the sealing ring of the new engine oil filter. Fit the engine oil filter and tighten to 10 Nm.

- After the engine oil has completely drained out, fit a new sealing washer to the sump plug. Fit and tighten the plug to 25 Nm.
- Remove the engine oil filler plug.
- Using a suitable funnel, fill the engine with a 10W/40 or 10W/50 semi or fully synthetic motorcycle engine oil that meets specification API SH (or higher) and JASO MA, such as Castrol Power 1 Racing 4T 10W-40 (fully synthetic) engine oil, sold as Castrol Power RS Racing 4T 10W-40 (fully synthetic) in some countries.
- Do not overfill or exceed the capacities given in the Specifications section.
- Start the engine and allow it to idle for a minimum of 30 seconds.

⚠ Caution

Raising the engine speed above idle, before the engine oil reaches all parts of the engine can cause engine damage or seizure.

Only raise engine speed after running the engine for 30 seconds to allow the engine oil to circulate fully.

- Make sure that the low oil pressure warning light extinguishes shortly after starting.

⚠ Caution

If the engine oil pressure is too low, the low oil pressure warning light will illuminate. If this light stays on when the engine is running, stop the engine immediately and investigate the cause.

Running the engine with low oil pressure will cause engine damage.

- Turn the ignition OFF, check the engine oil level using the method previously described, and top up to between the minimum and maximum level lines in the sight glass.

Disposal of Used Engine Oil and Oil Filters

To protect the environment, do not pour oil on the ground, down sewers or drains, or into watercourses.

Do not place used oil filters in with general waste. If in doubt, contact your local authority.

Engine Oil Specification and Grade (10W/40 & 10W/50)

Triumph's high performance fuel injected engines are designed to use 10W/40 or 10W/50 semi or fully synthetic motorcycle engine oil that meets specification API SH (or higher) and JASO MA, such as Castrol Power 1 Racing 4T 10W-40 (fully synthetic) engine oil, sold as Castrol Power RS Racing 4T 10W-40 (fully synthetic) in some countries.

Refer to the chart below for the correct oil viscosity (10W/40 or 10W/50) to be used in your riding area.

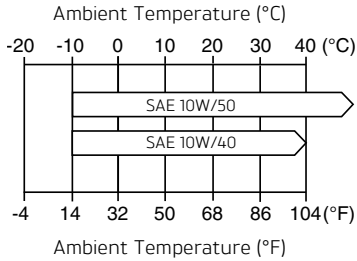

Oil Viscosity Temperature Range

Do not add any chemical additives to the engine oil. The engine oil also lubricates the clutch and any additives could cause the clutch to slip.

Do not use mineral, vegetable, non-detergent oil, castor based oils or any oil not conforming to the required specification. The use of these oils may cause instant, severe engine damage.

Make sure that no foreign matter enters the crankcase during an engine oil change or top up.

Cooling System

To ensure efficient engine cooling, check the coolant level each day before riding the motorcycle, and top up the coolant if the level is low.

Note

The motorcycle is fitted with D2053 coolant, a year round, Organic Additive Technology (known as OAT) coolant when it leaves the factory. It is coloured orange, and contains a 50% solution of monoethylene glycol based antifreeze.

D2053 coolant, as supplied by Triumph, provides freeze protection to -40°C (-40°F).

Corrosion Inhibitors

Warning

D2053 OAT coolant contains corrosion inhibitors and antifreeze suitable for aluminium engines and radiators. Always use the coolant in accordance with the instructions of the manufacturer.

Coolant contains toxic chemicals that are harmful to the human body.

Contact with skin or eyes may cause severe irritation. Wear protective gloves, clothing and eye protection when handling coolant.

If coolant is inhaled, remove the person to fresh air and keep comfortable for breathing. In case of doubt or persistent symptoms, seek medical attention.

If coolant gets on your skin, flush with water immediately. Remove contaminated clothing.

If coolant gets in your eyes, flush with water for at least 15 minutes and SEEK MEDICAL ATTENTION IMMEDIATELY.

If coolant is swallowed, rinse the mouth with water and SEEK MEDICAL ATTENTION IMMEDIATELY.

KEEP COOLANT OUT OF THE REACH OF CHILDREN.

Note

D2053 OAT coolant, as supplied by Triumph, is premixed and does not need to be diluted prior to filling or topping up the cooling system.

To protect the cooling system from corrosion, the use of corrosion inhibitor chemicals in the coolant is essential.

If coolant containing a corrosion inhibitor is not used, the cooling system will accumulate rust and scale in the water jacket and radiator. This will block the coolant passages, and considerably reduce the efficiency of the cooling system.

Coolants of different types must not be mixed. Mixing coolants of different types will reduce the performance of the coolant and reduce its life. When replacing coolant, it is recommended to thoroughly flush the cooling system with clean water.

Coolant Level Inspection

The coolant level should be checked when the engine is cold (at room or ambient temperature).

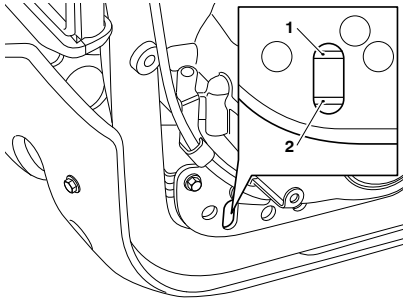

1. **MAX level**
2. **MIN level**

To inspect the coolant level:

- Position the motorcycle on level ground and in an upright position. The expansion tank can be viewed from the left hand side of the motorcycle, towards the rear of the engine.
- Check the coolant level in the expansion tank. The coolant level must be between the MIN and MAX marks. If the coolant is below the minimum lower level, the coolant level must be adjusted.

Coolant Level Adjustment

Warning

Do not remove the expansion tank or radiator pressure cap when the engine is hot.

When the engine is hot, the coolant inside the radiator will be hot and also under pressure.

Contact with this hot, pressurised coolant will cause scalds and skin damage.

Caution

If hard water is used in the cooling system, it will cause scale accumulation in the engine and radiator and considerably reduce the efficiency of the cooling system.

Reduced cooling system efficiency may cause the engine to overheat and suffer severe damage.

Note

If the coolant level is being checked because the coolant has overheated, also check the level in the radiator and top up if necessary.

In an emergency, distilled water can be added to the cooling system. However, the coolant must then be drained and replenished with HD4X Hybrid OAT coolant as soon as possible.

The expansion tank can be accessed from the left hand side of the motorcycle, towards the rear of the engine.

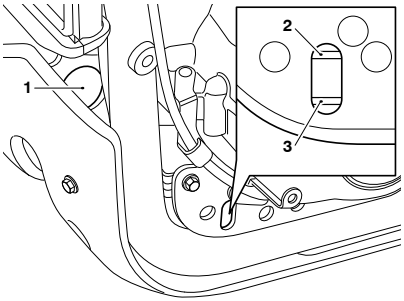

1. **Expansion tank cap**
2. **MAX level**
3. **MIN level**

To adjust the coolant level:

- Allow the engine to cool for a minimum of 30 minutes.
- Remove the expansion tank cap from the expansion tank and add coolant mixture through the filler opening until the level reaches the MAX mark.
- Refit the expansion tank cap.

Coolant Change

It is recommended that the coolant is changed by an authorised Triumph dealer in accordance with scheduled maintenance requirements.

Radiator and Hoses

Warning

The fan operates automatically when the engine is running.

Always keep hands and clothing away from the fan.

Contact with the rotating fan may cause an accident and/or personal injury.

Caution

Using high pressure water sprays, such as from a car wash facility or household pressure washer, can damage the radiator fins, cause leaks and impair the radiator's efficiency.

Do not obstruct or deflect airflow through the radiator by installing unauthorised accessories, either in front of the radiator or behind the cooling fan.

Interference with the radiator airflow can cause overheating, potentially resulting in engine damage.

Check the radiator hoses for cracks or deterioration, and tension clips for tightness in accordance with scheduled maintenance requirements. Have your authorised Triumph dealer replace any defective items.

Check the radiator grille and fins for obstructions by insects, leaves or mud. Clean off any obstructions with a stream of low pressure water.

Throttle Control

Warning

Always be alert for changes in the 'feel' of the throttle control and have the throttle system checked by an authorised Triumph dealer if any changes are detected.

Changes can be due to wear in the mechanism, which could lead to a sticking throttle control.

A sticking or stuck throttle control will lead to loss of motorcycle control and an accident.

Throttle Inspection

Warning

Use of the motorcycle with a sticking or damaged throttle control will interfere with the throttle function resulting in loss of motorcycle control and an accident.

To avoid continued use of a sticking or damaged throttle control, always have it checked by your authorised Triumph dealer.

To inspect the throttle:

- Check that the throttle opens smoothly, without undue force and that it closes without sticking. Have your authorised Triumph dealer check the throttle system if a problem is detected or any doubt exists.
- If there is an incorrect amount of free play, Triumph recommends that you have your authorised Triumph dealer investigate.
- Check that there is 1 - 2 mm of throttle grip free play when lightly turning the throttle grip back and forth.

Clutch

The motorcycle is equipped with a cable-operated clutch.

If the clutch lever has excessive free play, the clutch may not disengage fully. This will cause difficulty in changing gear and selecting neutral. This may cause the engine to stall and make the motorcycle difficult to control.

Conversely, if the clutch lever has insufficient free play the clutch may not engage fully, causing the clutch to slip, which will reduce performance and cause premature clutch wear.

Clutch lever free play must be checked in accordance with scheduled maintenance requirements.

Clutch Inspection

Check that there is 2 - 3 mm clutch lever free play at the lever.

If there is an incorrect amount of free play, adjustments must be made.

Clutch Adjustment

To adjust the clutch:

- Turn the adjuster sleeve until the correct amount of clutch lever free play is achieved.
- Check that there is 2 - 3 mm clutch lever free play at the lever.
- If there is an incorrect amount of free play, adjustments must be made.

Scrambler 1200 Steve McQueen Edition and Scrambler 1200 XE

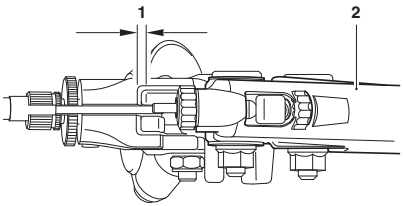

1. **Correct clearance 2-3 mm**
2. **Clutch lever**

Scrambler 1200 XC

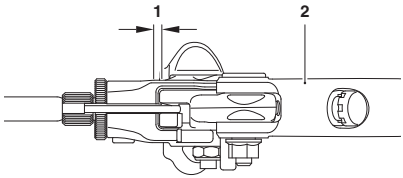

1. **Correct clearance 2-3 mm**
2. **Clutch lever**

- If correct adjustment cannot be made using the lever adjuster, use the cable adjuster at the lower end of the cable.
- Loosen the adjuster lock nut.
- Turn the outer cable adjuster to give 2 - 3 mm of free play at the clutch lever.
- Tighten the lock nut to 3.5 Nm.

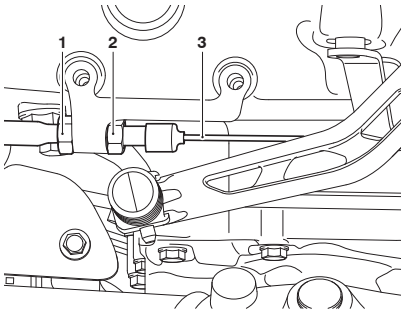

1. **Adjuster nut**
2. **Lock nut**
3. **Clutch cable**

Drive Chain

Warning

A loose or worn chain, or a chain that breaks or jumps off the sprockets could catch on the engine sprocket or lock the rear wheel.

A chain that snags on the engine sprocket will injure the rider and lead to loss of motorcycle control and an accident.

Similarly, locking the rear wheel will lead to loss of motorcycle control and an accident.

For safety and to prevent excessive wear the drive chain must be checked, adjusted and lubricated in accordance with the scheduled maintenance requirements. Checking, adjustment and lubrication must be carried out more frequently for extreme conditions such as high speed riding, salty or heavily gritted roads.

If the chain is badly worn or incorrectly adjusted (either too loose or too tight) the chain could jump off the sprockets or break. Therefore, always replace worn or damaged chains using genuine Triumph parts supplied by an authorised Triumph dealer.

Drive Chain Lubrication

Lubrication is necessary every 200 miles (300 km) and also after riding in wet weather, on wet roads, or any time that the chain appears dry.

To lubricate the drive chain:

- Use the special drive chain lubricant as recommended in the Specifications section.
- Apply lubricant to the sides of the rollers then allow the motorcycle to stand unused for at least eight hours (overnight is ideal). This will allow the lubricant to penetrate to the drive chain O-rings etc.
- Before riding, wipe off any excess lubricant.
- If the drive chain is especially dirty, clean first and then apply lubricant as mentioned above.

Caution

Do not use a pressure washer to clean the drive chain as this may cause damage to the drive chain components.

Drive Chain Free Movement Inspection

Warning

Before starting work, make sure the motorcycle is stabilised and adequately supported.

This will help prevent it from falling and causing personal injury and/or damage to the motorcycle.

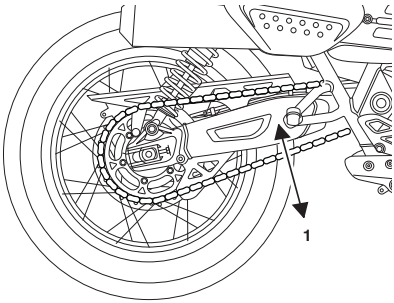

1. **Maximum movement position**

To inspect the drive chain free movement:

- Place the motorcycle on a level surface and hold it in an upright position with no weight on it.
- Rotate the rear wheel by pushing the motorcycle to find the position where the drive chain is tightest, and measure the vertical movement of the drive chain midway between the sprockets.

Drive Chain Free Movement Adjustment

Warning

Operation of the motorcycle with insecure adjuster lock nuts or a loose wheel spindle may result in impaired stability and handling of the motorcycle.

This impaired stability and handling may lead to loss of control or an accident.

The vertical movement of the drive chain must be in the range 20 - 30 mm.

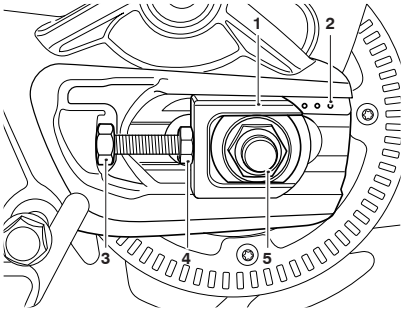

1. **Spindle adjuster**
2. **Adjuster markings**
3. **Adjuster bolt lock nut**
4. **Adjuster bolt**
5. **Rear wheel spindle nut**

If the drive chain free movement measurement is incorrect, adjustments must be made as follows:

- Loosen the wheel spindle nut.
- Loosen the lock nuts on both the left hand and right hand drive chain adjuster bolts.
- Move both adjusters by an equal amount using the adjuster markings as a guideline.
- Turn the adjuster bolts clockwise to increase drive chain free movement and anticlockwise to reduce drive chain free movement.
- When the correct amount of drive chain free movement has been set, push the wheel into firm contact with the adjusters.
- Make sure the same adjuster marking is aligned with the spindle adjuster on both sides of the swinging arm.
- Tighten both adjuster lock nuts to 20 Nm and the rear wheel spindle nut to 110 Nm.
- Repeat the drive chain adjustment check. Readjust if necessary.
- Check the rear brake effectiveness. Rectify if necessary.

Warning

It is dangerous to operate the motorcycle with defective brakes; you must have your authorised Triumph dealer take remedial action before you attempt to ride the motorcycle again.

Failure to take remedial action may reduce braking efficiency leading to loss of motorcycle control or an accident.

Drive Chain and Sprocket Wear Inspection

Warning

Never neglect drive chain maintenance and always have drive chains installed by an authorised Triumph dealer.

Use a genuine Triumph supplied drive chain as specified in the Triumph Parts Catalogue.

The use of non-approved drive chains may result in a broken drive chain or may cause the drive chain to jump off the sprockets leading to loss of motorcycle control or an accident.

Caution

If the sprockets are found to be worn, always replace the sprockets and drive chain together.

Replacing worn sprockets without also replacing the drive chain will lead to premature wear of the new sprockets.

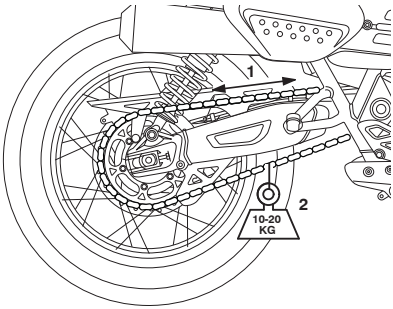

1. **Measure across 20 links**
2. **Weight**

To inspect the drive chain and sprocket wear:

- Remove the drive chain guard.
- Stretch the drive chain taut by hanging a 10 - 20 kg (20 - 40 lb) weight on the drive chain.
- Measure the length of 20 links on the straight part of the drive chain from pin centre of the 1st pin to the pin centre of the 21st pin. Since the drive chain may wear unevenly, take measurements in several places.
- If the length exceeds the maximum service limit of 320 mm, the drive chain must be replaced.
- Rotate the rear wheel and inspect the drive chain for damaged rollers, and loose pins and links.
- Also inspect the sprockets for unevenly or excessively worn or damaged teeth.

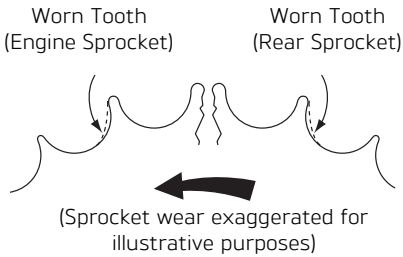

ccol

Note

Illustration shows wear on sprockets mounted on the left hand side of the motorcycle.

For sprockets mounted on the right hand side of the motorcycle, the wear is on the opposite side of the tooth.

- If there is any irregularity, have the drive chain and/or the sprockets replaced by an authorised Triumph dealer.
- Refit the chain guard and tighten the front fixing to 4 Nm and the rear fixing to 9 Nm.

Brakes

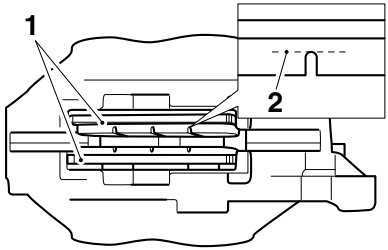

cbmz_2

1. **Brake pads**
2. **Minimum thickness line**

Brake pads must be inspected in accordance with scheduled maintenance requirements and replaced if worn to, or beyond the minimum service thickness.

If the lining thickness of any pad is less than 1.0 mm (0.04 in) from the backing, replace all the pads on the wheel.

Breaking-in New Brake Pads and Discs

Warning

Brake pads must always be replaced as a wheel set. At the front, where two calipers are fitted on the same wheel, replace all the brake pads in both calipers.

Replacing individual pads will reduce braking efficiency and may cause an accident.

After replacement brake pads have been fitted, ride with extreme caution until the new pads have 'broken in'.

New brake discs and pads require a period of careful breaking-in that will optimise the performance and longevity of the discs and pads. The recommended distance for breaking-in new pads and discs is 200 miles (300 km).

During this period, avoid extreme braking, ride with caution and allow for greater braking distances.

Brake Pad Wear Compensation

Warning

If the brake lever or pedal feels soft when it is applied, or if the lever/pedal travel becomes excessive, there may be air in the brake pipes and hoses or the brakes may be defective.

It is dangerous to operate the motorcycle under such conditions and your authorised Triumph dealer must rectify the fault before riding.

Riding with defective brakes may lead to loss of motorcycle control and an accident.

Disc and brake pad wear is automatically compensated for and has no effect on the brake lever or pedal action. There are no parts that require adjustment on the front and rear brakes.

Disc Brake Fluid

Warning

Brake fluid is hygroscopic which means it will absorb moisture from the air.

Any absorbed moisture will greatly reduce the boiling point of the brake fluid causing a reduction in braking efficiency.

Because of this, always replace brake fluid in accordance with scheduled maintenance requirements.

Always use new brake fluid from a sealed container and never use fluid from an unsealed container or from one which has been previously opened.

Do not mix different brands or grades of brake fluid.

Check for fluid leakage around brake fittings, seals and joints and also check the brake hoses for splits, deterioration and damage.

Always rectify any faults before riding.

Failure to observe and act upon any of these items may cause a dangerous riding condition leading to loss of control and an accident.

Warning

If the ABS is not functioning, the brake system will continue to function as a non-ABS equipped brake system.

In this situation, braking too hard will cause the wheels to lock resulting in loss of control and an accident.

Reduce speed and do not continue to ride for longer than is necessary with the indicator light illuminated. Contact an authorised Triumph dealer as soon as possible to have the fault checked and rectified.

Inspect the level of brake fluid in both reservoirs and change the brake fluid in accordance with scheduled maintenance requirements. Use only DOT 4 fluid as recommended in the Specification section. The brake fluid must also be changed if it becomes, or is suspected of having become contaminated with moisture or any other contaminants.

Note

A special tool is required to bleed the ABS braking system. Contact your authorised Triumph dealer when the brake fluid needs renewing or the hydraulic system requires maintenance.

Front Brake Fluid Level Inspection and Adjustment

Warning

If there has been an appreciable drop in the level of the fluid in either fluid reservoir, consult your authorised Triumph dealer for advice before riding.

Riding with depleted brake fluid levels, or with a brake fluid leak is dangerous and will cause reduced brake performance potentially leading to loss of motorcycle control and an accident.

Inspect and adjust the brake fluid level as described below.

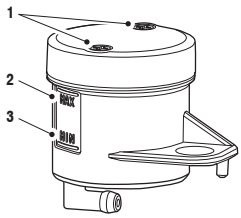

jajc_3

1. **Reservoir cap retaining screws**
2. **MAX level line**
3. **MIN level line**

The brake fluid level in the reservoir must be kept between the MAX and MIN level lines (reservoir held horizontal).

To adjust the brake fluid level:

- Release the reservoir cap retaining screws and remove the reservoir cap and the diaphragm seal.
- Fill the reservoir to the MAX level line using new DOT 4 fluid from a sealed container.
- Refit the reservoir cap making sure that the diaphragm seal is correctly positioned between the reservoir cap and reservoir body.
- Tighten the reservoir cap retaining screws to 1 Nm.

Rear Brake Fluid Level Inspection

Warning

If there has been an appreciable drop in the level of the fluid in either fluid reservoir, consult your authorised Triumph dealer for advice before riding.

Riding with depleted brake fluid levels, or with a brake fluid leak is dangerous and will cause reduced brake performance potentially leading to loss of motorcycle control and an accident.

The rear brake fluid reservoir is located under the sprocket cover on the left hand side of the motorcycle.

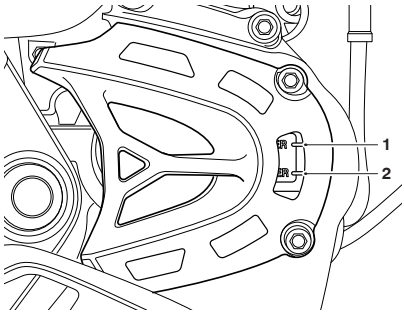

1. **UPPER level**
2. **LOWER level**

To inspect the rear brake fluid level:

- The brake fluid lever in the rear brake reservoir can be viewed through a section in the sprocket cover.
- The brake fluid level must be kept between the UPPER and LOWER level lines.

Rear Brake Fluid Level Adjustment

Warning

If there has been an appreciable drop in the level of the fluid in either fluid reservoir, consult your authorised Triumph dealer for advice before riding.

Riding with depleted brake fluid levels, or with a brake fluid leak is dangerous and will cause reduced brake performance potentially leading to loss of motorcycle control and an accident.

The rear brake fluid reservoir is located under the sprocket cover on the left hand side of the motorcycle.

To adjust the rear brake fluid level:

- Release the fixings and remove the sprocket outer cover.

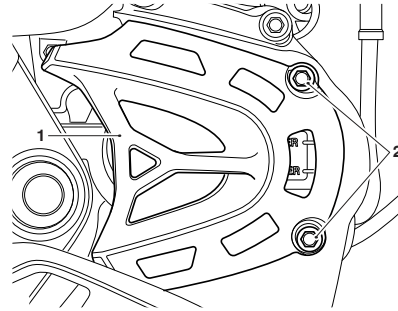

1. **Sprocket outer cover**
2. **Fixings**

Note

The fixing securing the sprocket middle cover also secures the rear brake fluid reservoir to the sprocket cover.

- Release the fixing and remove the sprocket middle cover. Discard the fixing.

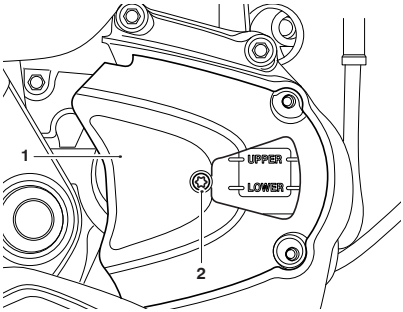

1. **Sprocket middle cover**
2. **Fixing**

- Detach the rear brake fluid reservoir from the sprocket cover.

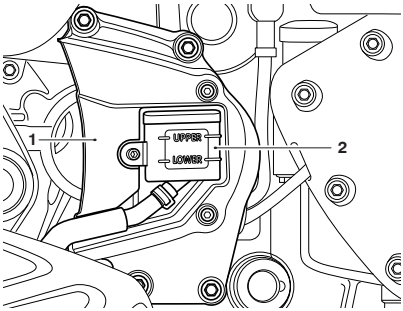

1. **Sprocket cover**
2. **Rear brake fluid reservoir**

- Release the rear brake fluid reservoir cap retaining screws and remove the reservoir cap noting the position of the sealing diaphragm.
- Fill the reservoir to the UPPER level line using new DOT 4 fluid from a sealed container.
- Refit the reservoir cap making sure that the diaphragm seal is correctly positioned between the reservoir cap and the reservoir body.
- Tighten the reservoir cover retaining screws to 1 Nm.
- Reattach the rear brake fluid reservoir to the sprocket cover.
- Refit the sprocket middle cover and tighten the new fixing to 3 Nm.
- Refit the sprocket outer cover and tighten the fixings to 9 Nm.

Rear Brake Pedal Adjustment

Warning

The rear brake pedal may require pressure to be applied to adjust it.

The rear brake pedal has sharp edges that may cause injury to the hands and fingers when applying pressure to adjust it.

When adjusting the rear brake pedal wear suitable gloves to avoid injury to the hands and fingers.

Scrambler 1200 Steve McQueen Edition and Scrambler 1200 XE Only

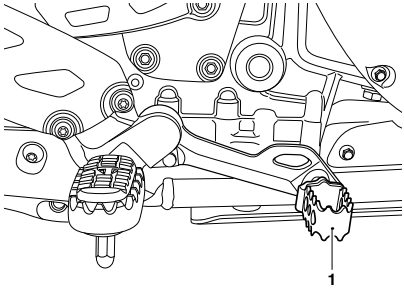

1. **Rear brake pedal**

The rear brake pedal is height adjustable.

To adjust the rear brake pedal height:

- Lift the rear brake pedal up and rotate it 180°. This will adjust the height by +/- 10 mm.

Brake Light Switches

Warning

Riding the motorcycle with defective brake lights is illegal and dangerous.

An accident causing injury to the rider and other road users may result from use of a motorcycle with defective brake lights.

The brake light is activated independently by either the front or rear brake. If, with the ignition in the ON position, the brake light does not work when the front brake lever is pulled or the rear brake pedal is pressed, have your authorised Triumph dealer investigate and rectify the fault.

Mirrors

Warning

Operation of the motorcycle with incorrectly adjusted mirrors is dangerous.

Operation of the motorcycle with incorrectly adjusted mirrors will result in loss of vision to the rear of the motorcycle. It is dangerous to ride a motorcycle without sufficient rearward vision.

Always adjust the mirrors to provide sufficient rearward vision before riding the motorcycle.

Warning

Never attempt to clean or adjust mirrors while riding the motorcycle. Removal of the rider's hands from the handlebars while riding the motorcycle will diminish the ability of the rider to maintain control of the motorcycle.

Attempting to clean or adjust mirrors while riding the motorcycle may result in loss of control of the motorcycle and an accident.

Only attempt to clean or adjust the mirrors while stationary.

Handlebars

Warning

It is recommended to have handlebar adjustments carried out by a trained technician of an authorised Triumph dealer.

Handlebar adjustments carried out by a technician who is not of an authorised Triumph dealer may affect the handling, stability or other aspects of the motorcycle's operation which may result in loss of motorcycle control and an accident.

Warning

Make sure the motorcycle is stabilised and adequately supported.

A correctly supported motorcycle will help prevent it from falling.

An unstable motorcycle may fall, causing injury to the operator or damage to the motorcycle.

Note

This procedure assumes the handlebars are in the standard position, as delivered from the factory.

If the handlebars have already been adjusted as described below, then rotate the handlebars risers through 180° to return the handlebars to the standard position.

The handlebars are adjustable for reach by approximately 20 mm. This is achieved by rotating the handlebars risers.

To adjust the handlebars:

- Loosen and remove the handlebars upper clamp bolts.

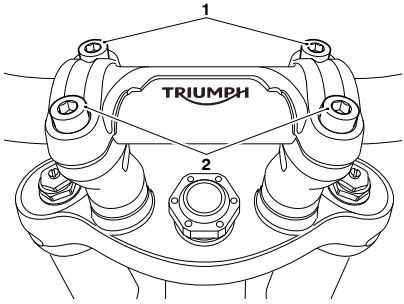

1. **Front upper clamp bolts**
2. **Rear upper clamp bolts**

- Remove the upper clamp.
- Lift the handlebars out of the handlebars risers and support with the aid of an assistant.

Note

Scrambler 1200 Steve McQueen Edition and Scrambler 1200 XE - Spacers are supplied to adjust the height of the handlebars. The spacers are located under the handlebars risers. Remove the handlebars risers. Add or remove the spacers depending on the required height needed. Refit the handlebars risers and tighten the handlebars riser bolts to 38 Nm.

- Rotate both risers through 180° and align the bolt holes.
- Reposition the handlebars to the risers.

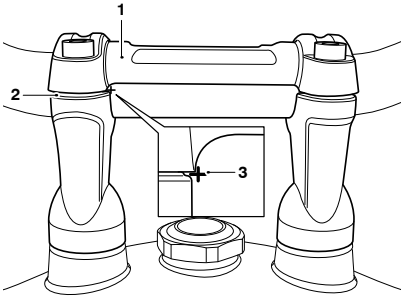

1. **Upper clamp**
2. **Clamp split line, front**
3. **Handlebars alignment mark**

- Refit the upper clamp, and secure with the threaded upper clamp bolts. Do not fully tighten the bolts at this stage.
- Rotate the handlebars so that the alignment mark on the handlebars aligns with the front left hand split line of the clamp riser.
- Tighten the upper clamp bolts to 24 Nm. Tighten the rear clamp bolts first and then the front clamp bolts.

Steering/Wheel Bearings

Caution

To prevent risk of injury from the motorcycle falling during the inspection, make sure that the motorcycle is stabilised and secured on a suitable support.

Do not exert extreme force against each wheel or rock each wheel vigorously as this may cause the motorcycle to become unstable and cause injury by falling from its support.

Make sure that the position of the support block will not cause damage to the motorcycle.

Steering Inspection

Warning

Riding the motorcycle with incorrectly adjusted or defective steering (headstock) bearings is dangerous and may cause loss of motorcycle control and an accident.

If in doubt, have the motorcycle inspected by an authorised Triumph dealer before riding.

The steering (headstock) bearings must be lubricated and inspected in accordance with scheduled maintenance requirements. Always inspect the wheel bearings at the same time as the steering bearings.

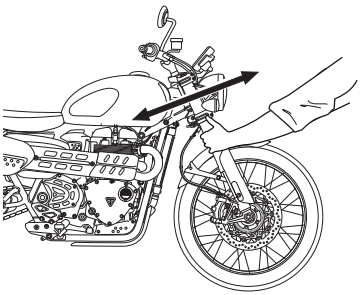

Inspecting the Steering for Free Play

To inspect the steering:

- Position the motorcycle on level ground, in an upright position.
- Raise the front wheel above the ground and support the motorcycle.
- Standing at the front of the motorcycle, hold the lower end of the front forks and try to move them forward and backward.
- If any free play can be detected in the steering (headstock) bearings, ask your authorised Triumph dealer to inspect and rectify any faults before riding.
- Remove the support and place the motorcycle on the side stand.

Wheel Bearings Inspection

Warning

Riding with worn or damaged front or rear wheel bearings is dangerous and may cause impaired handling and instability leading to an accident.

If in doubt, have the motorcycle inspected by an authorised Triumph dealer before riding.

The wheel bearings must be inspected at the intervals specified in the scheduled maintenance chart.

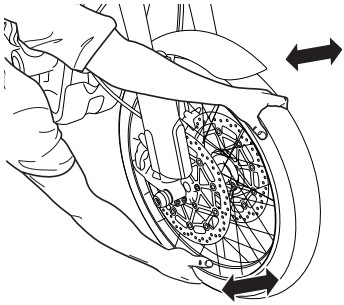

Inspecting the Wheel Bearings

To inspect the wheel bearings:

- Position the motorcycle on level ground, in an upright position.
- Raise the front wheel off the ground and support the motorcycle.
- Standing at the side of the motorcycle, gently rock the top of the front wheel from side to side.
- If any free play can be detected, ask your authorised Triumph dealer to inspect and rectify any faults before riding.
- Reposition the lifting device and repeat the procedure for the rear wheel.
- Remove the support and place the motorcycle on the side stand.

Note

If the wheel bearings in the front or rear wheel allow play in the wheel hub, are noisy, or if the wheel does not turn smoothly, have your authorised Triumph dealer inspect the wheel bearings.

Front Suspension

Warning

Make sure that the adjusters are set to the same setting on both front suspension units.

Settings that vary from left to right may affect handling and stability resulting in loss of motorcycle control and an accident.

Warning

Make sure that the correct balance between front and rear suspension is maintained.

Suspension imbalance could significantly change handling characteristics leading to loss of motorcycle control and an accident.

Refer to the tables for further information or consult your authorised Triumph dealer.

The Standard suspension setting provides a comfortable ride and good handling characteristics for general, solo riding. The following tables show suggested settings for the front suspension.

Front Suspension Settings

The motorcycle is delivered from the factory with all the suspension settings set at the Standard setting, as shown in the relevant suspension tables.

The settings shown in the tables are only a guide. Setting requirements may vary for rider and passenger weight and personal preferences.

All Models

Preload Suspension Settings	
Loading Condition	**Spring Preload**[1]
Solo Riding - Standard	Minimum
Solo Riding - Comfort (Softer)	Minimum
Solo Riding - Sport (Firmer)	Minimum
Rider and Passenger	Maximum
[1] Number of adjuster turns clockwise from the fully anticlockwise position.	

Scrambler 1200 XC

Damping Suspension Settings		
Loading Condition	**Rebound Damping**[1]	**Compression Damping**[1]
Solo Riding - Standard	1.5	1.5
Solo Riding - Comfort (Softer)	4 (Minimum)	4 (Minimum)
Solo Riding - Sport (Firmer)	0.25	0.25
Rider and Passenger	1.5	1.5
[1] Number of adjuster turns anticlockwise from the fully clockwise position.		

Scrambler 1200 Steve McQueen Edition and Scrambler 1200 XE

Damping Suspension Settings		
Loading Condition	**Rebound Damping**[1]	**Compression Damping**[1]
Solo Riding - Standard	2	2
Solo Riding - Comfort (Softer)	4 (Minimum)	4 (Minimum)
Solo Riding - Sport (Firmer)	0.25	0.25
Rider and Passenger	2	2
Off Road - Smooth Terrain	1	2
Off Road - Broken Terrain	4 (Minimum)	4 (Minimum)
[1] Number of adjuster turns anticlockwise from the fully clockwise position.		

Front Suspension Spring Preload Adjustment

The spring preload adjuster is located at the top of each fork.

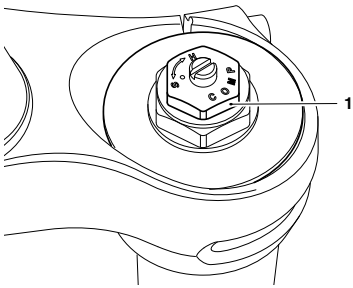

1. Front suspension spring preload adjuster

To change the spring preload setting:

- Rotate the spring preload adjuster clockwise to increase, or anticlockwise to decrease the preload.
- Always count the number of clockwise turns from the fully anticlockwise position and set both forks to the same settings.

Front Suspension Compression and Rebound Damping Adjustment

Compression Damping Adjustment

The compression damping adjuster is located at the top of the right hand fork.

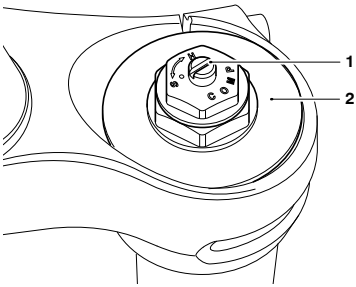

1. **Compression damping adjuster**
2. **Fork top cap**

To adjust the compression damping setting:

- Rotate the COMP slotted adjuster clockwise to increase (H = harder suspension), or anticlockwise to decrease (S = softer suspension).
- Always count the number of turns from the fully clockwise position.

Rebound Damping Adjustment

The rebound damping adjuster is located at the top of the left hand fork.

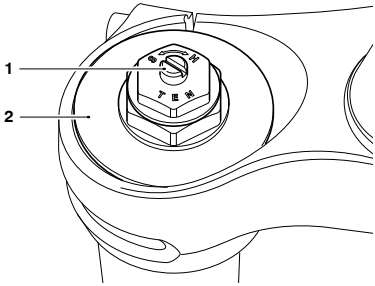

1. **Rebound damping adjuster**
2. **Fork top cap**

To adjust the rebound damping setting:

- Rotate the TEN slotted adjuster clockwise to increase (H = harder suspension), or anticlockwise to decrease (S = softer suspension).
- Always count the number of turns from the fully clockwise position.

Front Fork Inspection

Warning

Riding the motorcycle with defective or damaged suspension is dangerous and may lead to loss of control and an accident.

Warning

Never attempt to dismantle any part of the suspension units

All suspension units contain pressurised oil.

Skin and eye damage can result from contact with the pressurised oil.

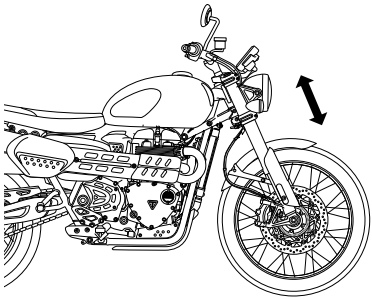

Front Fork Inspection

To inspect the forks:

- Position the motorcycle on level ground.
- While holding the handlebars and applying the front brake, pump the forks up and down several times.
- If roughness or excessive stiffness is detected, consult your authorised Triumph dealer.
- Examine each fork for any sign of damage, scratching of the slider surface, or for oil leaks.
- If any damage or leakage is found, consult an authorised Triumph dealer.

Rear Suspension

Warning

Make sure that the adjusters are set to the same setting on both rear suspension units.

Settings that vary from left to right may affect handling and stability resulting in loss of motorcycle control and an accident.

Warning

Make sure that the correct balance between front and rear suspension is maintained.

Suspension imbalance could significantly change handling characteristics leading to loss of motorcycle control and an accident.

Refer to the tables for further information or consult your authorised Triumph dealer.

The standard rear suspension preload settings provide a comfortable ride and good handling characteristics for general, solo riding. The following tables show suggested settings for rear suspension under different load conditions for all models.

The rear suspension units on the motorcycle are fitted with plastic spring guides. These guides will gradually wear. If the motorcycle is used in dirty or dusty environments, this wear will be accelerated. The plastic spring guides are a replaceable item and can be replaced by an authorised Triumph dealer. Spring guide wear will not affect suspension performance.

Note

To reduce the wear on the rear suspension spring guides, dirt should be washed from between them after use in dirty or dusty environments.

Rear Suspension Settings

The motorcycle is delivered from the factory with all the suspension settings set at the Standard setting, as shown in the relevant suspension tables.

The settings given in the tables are only a guide. Setting requirements may vary for rider and passenger weight and personal preferences.

All Models

Preload Suspension Settings	
Loading Condition	**Rear Spring Preload**[1]
Solo Riding - Standard	Minimum
Solo Riding - Comfort (Softer)	Minimum
Solo Riding - Sport (Firmer)	Minimum
Rider and Passenger	Maximum

[1] Minimum is the fully anticlockwise position and maximum is the fully clockwise position.

Scrambler 1200 XC

Damping Suspension Settings		
Loading Condition	**Rear Compression Damping**[1]	**Rear Rebound Damping**[1]
Solo Riding - Standard	18	30
Solo Riding - Comfort (Softer)	22	35
Solo Riding - Sport (Firmer)	13	25
Rider and Passenger	13	23
[1] Number of adjuster clicks anticlockwise from the fully clockwise position noting that the first stop (click) is counted as one.		

Scrambler 1200 Steve McQueen Edition and Scrambler 1200 XE

Damping Suspension Settings		
Loading Condition	**Rear Compression Damping**[1]	**Rear Rebound Damping**[1]
Solo Riding - Standard	15	18
Solo Riding - Comfort (Softer)	20	25
Solo Riding - Sport (Firmer)	10	15
Rider and Passenger	8	13
Off Road - Smooth Terrain	10	13
Off Road - Broken Terrain	20	18
[1] Number of adjuster clicks anticlockwise from the fully clockwise position noting that the first stop (click) is counted as one.		

Rear Suspension Spring Preload Adjustment

The spring preload adjuster is located at the top of the rear suspension unit.

Note

It is not necessary to remove the rear suspension unit shroud or silencer to adjust the suspension. Access to the rear spring preload adjuster is from the rear of the motorcycle, under the seat.

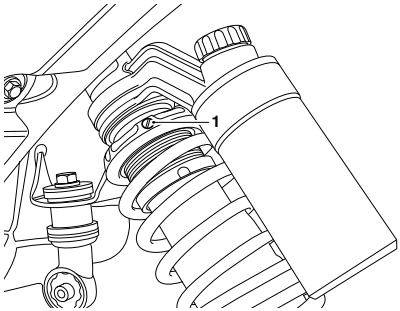

1. **Adjuster grub screw**

To adjust the rear spring preload setting:

- Locate the grub screw at the top of the rear suspension unit.

Note

Make sure that the screwdriver has a secure and tight fit in the grub screw slot before loosening the grub screw, otherwise the grub screw may get damaged.

- Loosen the grub screw.
- Rotate the adjuster ring clockwise to increase spring preload, and anticlockwise to decrease spring preload.
- Carefully tighten the grub screw to 0.5 Nm.

Rear Suspension Rebound Damping Adjustment

The rebound damping adjuster is located at the bottom of the rear suspension unit.

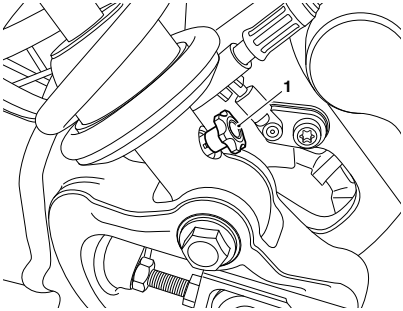

1. **Rear suspension rebound damping adjuster**

To adjust the rebound damping setting:

- Rotate the rebound damping adjuster clockwise to increase and anticlockwise to decrease.
- Always count the number of adjuster clicks anticlockwise from the fully clockwise position.

Rear Suspension Compression Damping Adjustment

The compression damping adjuster is located at the top of the rear suspension unit.

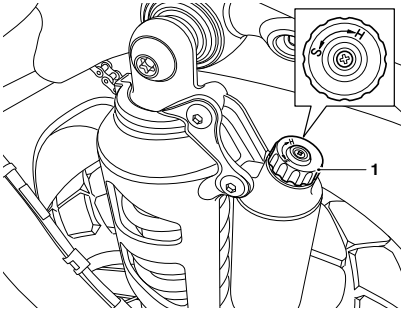

1. **Rear suspension compression damping adjuster**

To adjust the compression damping setting:

- Rotate the compression damping adjuster clockwise to increase (H = harder suspension), or anticlockwise to decrease (S = softer suspension).
- Always count the number of adjuster clicks anticlockwise from the fully clockwise position.

Bank Angle Indicators

Warning

Always replace the bank angle indicators before they are worn to their maximum limit.

Use of a motorcycle with bank angle indicators worn beyond the maximum limit will allow the motorcycle to be banked to an unsafe angle.

Banking to an unsafe angle may cause instability, loss of motorcycle control and an accident.

Bank angle indicators are located on the rider's footrests.

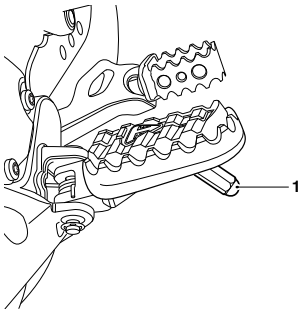

1. Bank angle indicator

Bank angle indicators must be replaced when they have reached the maximum wear limit of 15 mm in length. The maximum wear limit is shown by a groove on the bank angle indicator.

Regularly check the bank angle indicators for wear.

Tyres

This motorcycle is equipped with tubeless tyres, valves and spoked wheels.

Warning

Inner tubes must only be used on motorcycles fitted with spoked wheels and with tyres marked 'TUBE TYPE'.

Some brands of approved tyres marked 'TUBELESS' may be suitable for use with an inner tube. Where this is the case, the tyre wall will be marked with text permitting the fitment of an inner tube.

Use of an inner tube with a tyre marked 'TUBELESS', and NOT marked as suitable for use with an inner tube, or use of an inner tube on an alloy wheel marked 'SUITABLE FOR TUBELESS TYRES' will cause deflation of the tyre resulting in loss of motorcycle control and an accident.

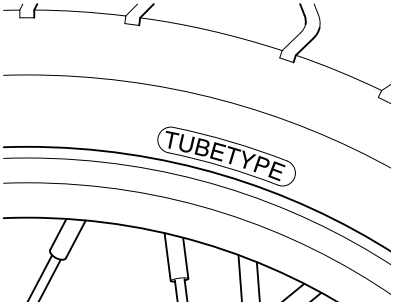

Typical Tyre Marking

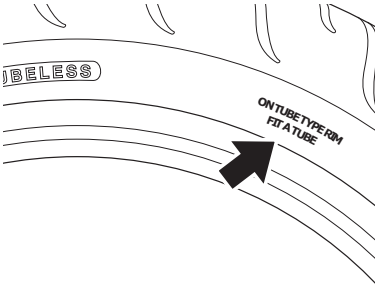

Typical Tyre Marking - Tubeless Tyre Suitable For Use With An Inner Tube

Tyre Inflation Pressures

Warning

Incorrect tyre inflation will cause abnormal tread wear and instability problems that may lead to loss of control and an accident.

Under inflation may result in the tyre slipping on, or coming off the rim. Overinflation will cause instability and accelerated tread wear.

Both conditions are dangerous as they may cause loss of control leading to an accident.

Warning

Tyre pressures which have been reduced for off-road riding will impair on-road stability.

Always make sure that the tyre pressures are set as described in the Specification section for on-road use.

Operation of the motorcycle with incorrect tyre pressures may cause loss of motorcycle control and an accident.

Correct inflation pressure will provide maximum stability, rider comfort and tyre life. Always check tyre pressures before riding when the tyres are cold. Check tyre pressures daily and adjust if necessary. See the Specification section for details of the correct inflation pressures.

Tyre Pressure Monitoring System (TPMS) (if fitted)

Caution

An adhesive label is fitted to the wheel rim to indicate the position of the tyre pressure sensor.

Care must be taken when replacing the tyres to prevent any damage to the tyre pressure sensors.

Always have the tyres fitted by an authorised Triumph dealer. It is important to inform them that tyre pressure sensors are fitted to the wheels before they remove the tyres.

Caution

Do not use anti puncture fluid or any other item likely to obstruct air flow to the TPMS sensor's orifices. Any blockage to the air pressure orifice of the TPMS sensor during operation will cause the sensor to become blocked, causing irreparable damage to the TPMS sensor assembly.

Damage caused by the use of anti puncture fluid or incorrect maintenance is not considered a manufacturing defect and will not be covered under warranty.

Always have the tyres fitted by an authorised Triumph dealer. It is important to inform them that tyre pressure sensors are fitted to the wheels before they remove the tyres.

The tyre pressures shown on your instruments indicate the actual tyre pressure at the time of selecting the display. This may differ from the inflation pressure set when the tyres are cold because tyres become warmer during riding, causing the air in the tyre to expand and increase the inflation pressure. The cold inflation pressures specified by Triumph take account of this.

Only adjust tyre pressures when the tyres are cold using an accurate pressure gauge. Do not use the tyre pressure display on the instruments.

Tyre Wear

As the tyre tread wears down, the tyre becomes more susceptible to punctures and failure. It is estimated that 90% of all tyre problems occur during the last 10% of tread life (90% worn). It is recommended that tyres are changed before they are worn to their minimum tread depth.

Minimum Recommended Tread Depth

Warning

Riding with excessively worn tyres is hazardous and will adversely affect traction, stability and handling which may lead to loss of control and an accident.

When tubeless tyres, used without a tube, become punctured, leakage is often very slow. Always inspect tyres very closely for punctures. Check the tyres for cuts, embedded nails or other sharp objects. Riding with punctured or damaged tyres will adversely affect motorcycle stability and handling which may lead to loss of control or an accident.

Check the rims for dents or deformation. Riding with damaged or defective wheels or tyres is dangerous and may lead to loss of control and an accident.

Always consult your authorised Triumph dealer for tyre replacement, or for a safety inspection of the tyres.

In accordance with the periodic maintenance chart, measure the depth of the tread with a depth gauge, and replace any tyre that has worn to, or beyond the minimum allowable tread depth specified in the table below:

Under 80 mph (130 km/h)	2 mm (0.08 in)
Over 80 mph (130 km/h)	Front 2 mm (0.08 in) Rear 3 mm (0.12 in)

Tyre Replacement

All Triumph motorcycles are carefully and extensively tested in a range of riding conditions to make sure that the most effective tyre combinations are approved for use on each model. It is essential that approved tyres and inner tubes (if installed) fitted in approved combinations, are used when purchasing replacement items. The use of non-approved tyres and inner tubes, or approved tyres and inner tubes in non-approved combinations, may lead to motorcycle instability, loss of control and an accident.

A list of approved tyres and inner tubes specific to your motorcycle are available from your authorised Triumph dealer, or on the Internet at www.triumph.co.uk. Always have tyres and inner tubes fitted and balanced by your authorised Triumph dealer who has the necessary training and skills to ensure safe, effective fitment.

When replacement tyres or inner tubes are required, consult your authorised Triumph dealer who will arrange for the tyres and inner tubes to be selected, in a correct combination, from the approved list and fitted according to the tyre and inner tube manufacturer's instructions.

Initially, the new tyres and inner tubes will not produce the same handling characteristics as the worn tyres and inner tubes and the rider must allow adequate riding distance (approximately 100 miles (160 km)) to become accustomed to the new handling characteristics.

24 hours after fitting, the tyre pressures must be checked and adjusted, and the tyres and inner tubes examined for correct seating. Rectification must be carried out as necessary. The same checks and adjustments must also be carried out when 100 miles (160 km) have been travelled after fitting.

Warning

Inner tubes must only be used on motorcycles fitted with spoked wheels and with tyres marked 'TUBE TYPE'.

Some brands of approved tyres marked 'TUBELESS' may be suitable for use with an inner tube. Where this is the case, the tyre wall will be marked with text permitting the fitment of an inner tube.

Use of an inner tube with a tyre marked 'TUBELESS', and NOT marked as suitable for use with an inner tube, or use of an inner tube on an alloy wheel marked 'SUITABLE FOR TUBELESS TYRES' will cause deflation of the tyre resulting in loss of motorcycle control and an accident.

Warning

Do not install tube type tyres on tubeless rims.

The bead will not seat and the tyres could slip on the rims, causing rapid tyre deflation that may result in a loss of motorcycle control and an accident.

Never install an inner tube inside a tubeless tyre without the appropriate marking. This will cause friction inside the tyre and the resulting heat build-up may cause the tube to burst resulting in rapid tyre deflation, loss of motorcycle control and an accident.

Warning

If a tyre or inner tube sustains a puncture, the tyre and inner tube must be replaced.

Failure to replace a punctured tyre and inner tube, or operation with a repaired tyre or inner tube can lead to instability, loss of motorcycle control or an accident.

Warning

If tyre damage is suspected, such as after striking the kerb, ask your authorised Triumph dealer to inspect the tyre both internally and externally.

Tyre damage may not always be visible from the outside.

Operation of the motorcycle with damaged tyres could lead to loss of control and an accident.

Warning

Use of a motorcycle with incorrectly seated tyres or inner tubes, incorrectly adjusted tyre pressures, or when not accustomed to its handling characteristics may lead to loss of motorcycle control and an accident.

Warning

ABS operates by comparing the relative speed of the front and rear wheels.

Use of non-recommended tyres can affect wheel speed and cause the ABS function not to operate, potentially leading to loss of motorcycle control and an accident in conditions where the ABS would normally function.

Warning

Accurate wheel balance is necessary for safe, stable handling of the motorcycle. Do not remove or change any wheel balance weights. Incorrect wheel balance may cause instability leading to loss of control and an accident.

When wheel balancing is required, such as after tyre or inner tube replacement, see your authorised Triumph dealer.

Only use self-adhesive weights. Clip on weights may damage the wheel, tyre or inner tube resulting in tyre deflation, loss of motorcycle control and an accident.

Warning

Tyres and inner tubes that have been used on a rolling road dynamometer may become damaged. In some cases, the damage may not be visible on the external surface of the tyre.

Tyres and inner tubes must be replaced after such use as continued use of a damaged tyre or inner tube may lead to instability, loss of motorcycle control and an accident.

Battery

Warning

The battery contains sulphuric acid (battery acid). Contact with skin or eyes may cause severe burns. Wear protective clothing and a face shield.

If battery acid gets on your skin, flush with water immediately.

If battery acid gets in your eyes, flush with water for at least 15 minutes and SEEK MEDICAL ATTENTION IMMEDIATELY.

If battery acid is swallowed, drink large quantities of water and SEEK MEDICAL ATTENTION IMMEDIATELY.

KEEP BATTERY ACID OUT OF THE REACH OF CHILDREN.

Warning

Under certain circumstances, the battery may release explosive gases. Make sure to keep all sparks, flames and cigarettes away from the battery.

Do not attach jump leads to the battery, touch the battery cables together or reverse the polarity of the cables, as any of these actions may cause a spark which would ignite battery gases causing a risk of personal injury.

Make sure that there is adequate ventilation when charging or using the battery in an enclosed space.

Warning

The battery contains harmful materials. Always keep children and pets away from the battery at all times.

Battery Removal

Warning

Make sure that the battery terminals do not touch the motorcycle frame.

This may cause a short circuit or spark which would ignite battery gases causing a risk of personal injury.

To remove the battery:

- Remove the seat (see page 87).
- Release the three fixings and carefully detach the storage tray.

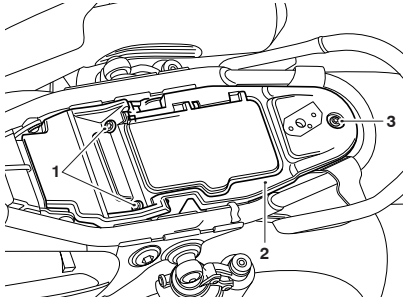

1. **Front fixings**
2. **Storage tray**
3. **Rear fixing**

- Take note of the positioning and routing of the USB connector and the Low Frequency (LF) antenna cables for reinstalling.

- Carefully turn over the storage tray and detach the USB connector and the Low Frequency (LF) antenna cables from the storage tray.

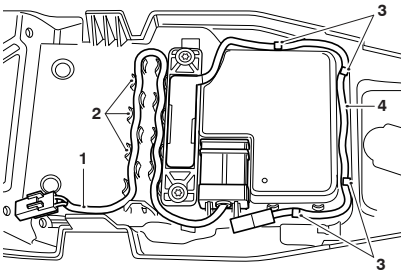

1. **USB connector cable**
2. **USB connector cable retaining clips**
3. **Low Frequency (LF) antenna cable retaining clips**
4. **Low Frequency (LF) antenna cable**

- Position the storage tray to allow access to the battery.

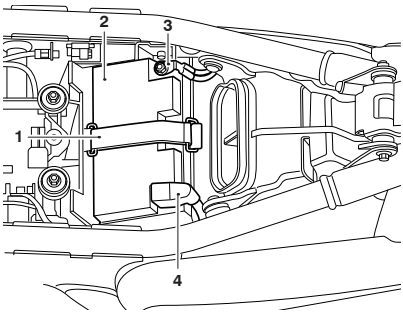

1. **Battery strap**
2. **Battery**
3. **Negative (-) terminal**
4. **Positive (+) terminal**

- Disconnect the battery leads, negative (black) lead first.
- Remove the battery strap.
- Take the battery out of the case.

Battery Disposal

Should the battery ever require replacement, the original battery must be handed to a recycling agent who will make sure that the dangerous substances from which the battery is manufactured do not pollute the environment.

Battery Maintenance

Warning

Battery acid is corrosive and poisonous and will cause damage to unprotected skin.

Never swallow battery acid or allow it to come into contact with the skin.

To prevent injury, always wear eye and skin protection when handling the battery.

The battery is a sealed type and does not require any maintenance other than checking the voltage and routine recharging when required, such as during storage.

Clean the battery using a clean, dry cloth. Make sure that the cable connections are clean.

It is not possible to adjust the battery acid level in the battery; the sealing strip must not be removed.

Battery Discharge

⚠ Caution

The charge level in the battery must be maintained to maximise battery life.

Failure to maintain the battery charge level could cause serious internal damage to the battery.

Under normal conditions, the motorcycle charging system will keep the battery fully charged. However, if the motorcycle is unused, the battery will gradually discharge due to a normal process called self discharge; the clock, Engine Control Module (ECM) memory, high ambient temperatures, or the addition of electrical security systems or other electrical accessories will all increase this rate of battery discharge. Disconnecting the battery from the motorcycle during storage will reduce the rate of discharge.

Battery Discharge During Storage and Infrequent Use of the Motorcycle

During storage or infrequent use of the motorcycle, inspect the battery voltage weekly using a multimeter. Follow the manufacturer's instructions supplied with the meter.

Should the battery voltage fall below 12.7 Volts, the battery should be charged.

Allowing a battery to discharge or leaving it discharged for even a short period of time causes sulphation of the lead plates. Sulphation is a normal part of the chemical reaction inside the battery, however over time the sulphate can crystallise on the plates making recovery difficult or impossible. This permanent damage is not covered by the motorcycle warranty, as it is not due to a manufacturing defect.

Keeping the battery fully charged reduces the likelihood of it freezing in cold conditions. Allowing a battery to freeze will cause serious internal damage to the battery.

Battery Charging

Warning

The battery contains sulphuric acid (battery acid). Contact with skin or eyes may cause severe burns. Wear protective clothing and a face shield.

If battery acid gets on your skin, flush with water immediately.

If battery acid gets in your eyes, flush with water for at least 15 minutes and SEEK MEDICAL ATTENTION IMMEDIATELY.

If battery acid is swallowed, drink large quantities of water and SEEK MEDICAL ATTENTION IMMEDIATELY.

KEEP BATTERY ACID OUT OF THE REACH OF CHILDREN.

Caution

Do not use an automotive quick charger as it may overcharge and damage the battery.

For help with selecting a battery charger, checking the battery voltage or battery charging, contact your local authorised Triumph dealer.

Should the battery voltage fall below 12.7 Volts, the battery should be charged using a Triumph approved battery charger. Always remove the battery from the motorcycle and follow the instructions supplied with the battery charger.

For extended periods of storage (beyond two weeks) the battery should be removed from the motorcycle and kept charged using a Triumph approved maintenance charger.

Similarly, should the battery charge fall to a level where it will not start the motorcycle, remove the battery from the motorcycle before charging.

Battery Installation

Warning

Make sure that the battery terminals do not touch the motorcycle frame.

This may cause a short circuit or spark which would ignite battery gases causing a risk of personal injury.

To install the battery:

- Place the battery in the battery case.
- Secure with the battery strap.
- Reconnect the battery, positive (red) lead first.
- Tighten the battery terminals to 4.5 Nm.
- Apply a light coat of grease to the terminals to prevent corrosion.
- Cover the positive terminal with the protective cap.
- Reattach the USB connector and the Low Frequency (LF) antenna cables to the storage tray as noted for removal.

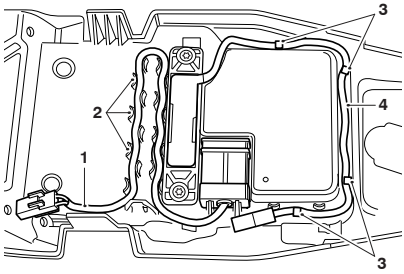

1. **USB connector cable**
2. **USB connector cable retaining clips**
3. **Low Frequency (LF) antenna cable retaining clips**
4. **Low Frequency (LF) antenna cable**

- Refit the storage tray and tighten the two front fixings to 5 Nm and the rear fixing to 3 Nm.

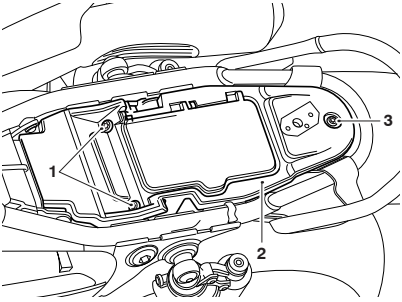

1. **Front fixings**
2. **Storage tray**
3. **Rear fixing**

- Refit the seat (see page 87).

Fuses

Warning

Always replace blown fuses with new ones of the correct rating (as specified on the fuse box cover).

Never replace a blown fuse with a fuse of a different rating.

Use of an incorrect fuse could lead to an electrical problem, resulting in motorcycle damage, loss of motorcycle control and an accident.

Note

A blown fuse is indicated when all of the systems protected by that fuse become inoperative. When checking for a blown fuse, use the table to establish which fuse has blown.

The fuse box is located behind the left hand side panel. To gain access to the fuse box, the side panel must be removed (see page 85).

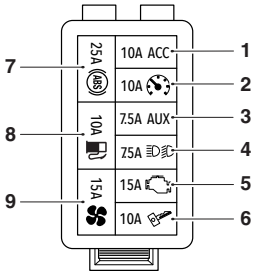

Fuse Box

Position	Circuit Protected	Rating (Amps)
1	Accessory socket, heated grip	10
2	Instruments	10
3	Auxiliary (alarm, horn)	7.5
4	Lighting	7.5
5	EMS	15
6	Ignition	10
7	ABS	25
8	Fuel pump	10
9	Cooling fan	15

Note

The 30 Amp main fuse is in a separate fuse box also located behind the left hand side panel.

Headlights

Warning

Adjust road speed to suit the visibility and weather conditions in which the motorcycle is being operated.

Make sure that the head light beam is adjusted to illuminate the road surface sufficiently far ahead without dazzling oncoming traffic.

An incorrectly adjusted headlight may impair visibility causing an accident.

Warning

Never attempt to adjust a headlight beam when the motorcycle is in motion.

Any attempt to adjust a headlight beam when the motorcycle is in motion may result in loss of control and an accident.

Caution

Do not cover the headlight or lens with any item likely to obstruct air flow to, or prevent heat escaping from, the headlight lens.

Covering the headlight lens during operation with items of clothing, luggage, adhesive tape, devices intended to alter or adjust the headlight beam or non genuine headlight lens covers will cause the headlight lens to overheat and distort, causing irreparable damage to the headlight assembly.

Damage caused by overheating is not considered a manufacturing defect and will not be covered under warranty.

If the headlight must be covered during use - such as taping of the headlight lens required during closed-course conditions - the headlight must be disconnected.

Headlights

The headlight unit is a sealed, maintenance free LED unit. The headlight unit must be replaced in the event of the failure of the headlight.

Headlight Adjustment

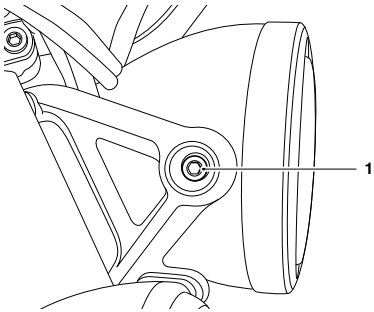

1. **Headlight assembly mounting bolt**

To adjust the headlight beam:

- Always make sure the handlebars are in the straight ahead position.
- Vertical adjustment of the headlight beam is controlled by loosening the headlight assembly mounting bolts and altering the position of the headlight assembly.
- Retighten the headlight assembly mounting bolts after adjustment to 10 Nm.

Rear Light

The rear light unit is a sealed, maintenance free LED unit. The rear light unit must be replaced in the event of the failure of the rear light.

Multifunctional Rear Lights (if fitted)

The multifunctional rear light units operate as the rear position light, brake light and direction indicators.

The multifunctional rear light units are a sealed, maintenance free LED unit and must be replaced in the event of the failure of the rear lights.

Direction Indicator Lights

The direction indicator light units are sealed, maintenance free LED units. A direction indicator light unit must be replaced in the event of the failure of the direction indicator light.

License Plate Light

The license plate light unit is a sealed, maintenance free LED unit. The license plate light unit must be replaced in the event of the failure of the license plate light.

Table of Contents

Cleaning 162
Preparation for Washing 162
Where to be Careful 163
Washing 163
After Washing 164
Gloss Paintwork Care 164
Matt Paintwork Care 164
Aluminium Items - not Lacquered or Painted 165
Chrome and Stainless Steel Care 165
Black Chrome Care 166
Exhaust System Care 166
Seat Care 167
Windscreen Care (if fitted) 168
Leather Products Care 169
Storage 170

Cleaning

Frequent, regular cleaning is an essential part of the maintenance of your motorcycle. If regularly cleaned, the appearance will be preserved for many years.

Cleaning with cold water containing an automotive cleaner is essential at all times but particularly so after exposure to sea breezes, sea water, dusty or muddy roads and in winter when roads are treated for ice and snow.

Do not use household detergent, as the use of such products will lead to premature corrosion.

Although, under the terms of your motorcycle warranty, cover is provided against the corrosion of certain items, the owner is expected to observe this reasonable advice which will safeguard against corrosion and enhance the appearance of the motorcycle.

Preparation for Washing

Before washing, precautions must be taken to keep water off the following places.

Rear opening of the exhausts: Cover with a plastic bag secured with rubber bands.

Clutch and brake levers, switch housings on the handlebar: Cover with plastic bags.

Ignition switch and steering lock: Cover the keyhole (if applicable) with tape.

Remove any items of jewellery such as rings, watches, zips or belt buckles, which may scratch or otherwise damage painted or polished surfaces.

Use separate cleaning sponges or cleaning cloths for washing painted/polished surfaces and chassis areas. Chassis areas (such as wheels and under mudguards) will be exposed to more abrasive road grime and dust, which may then scratch painted or polished surfaces, if the same sponge or cleaning cloths are used.

Where to be Careful

Caution

Do not use high pressure spray washers or steam cleaners.

Use of high pressure spray washers and steam cleaners may damage seals, and cause water and steam to be forced into bearings and other components causing premature wear from corrosion and loss of lubrication.

Caution

Do not spray any water at all near the air intake duct.

The air intake duct is located under the rider's seat, under the fuel tank or near the steering head.

Any water sprayed in this area could enter the airbox and engine, causing damage to both items.

Do not get water near the following places:

- Air and any intake duct
- Any visible electrical components
- Brake cylinders and brake calipers
- Handlebar switch housings
- Headstock bearings
- Instruments
- Oil filler cap
- Rear bevel box breather (if fitted)
- Rear of headlights
- Seats
- Suspension seals and bearings
- Under the fuel tank
- Wheel bearings.

Washing

To wash the motorcycle, do the following:

- Make sure that the motorcycle engine is cold.
- Prepare a mixture of clean, cold water and mild automotive cleaner or low alkaline soap.
- Do not use a highly alkaline soap as commonly found at commercial car washes because it will leave a residue on painted surfaces and may also cause water spotting.
- Wash the motorcycle with a sponge or soft cloth.
- Do not use abrasive scouring pads or steel wool. They will damage the finish.
- Rinse the motorcycle thoroughly with clean, cold water.

After Washing

Warning

Never wax or lubricate the brake discs.

Always clean the brake disc with a proprietary brand of oil-free brake disc cleaner.

Waxed or lubricated brake discs may cause loss of braking power and an accident.

After washing the motorcycle, do the following:

- Remove the plastic bags and tape, and clear the air intakes.
- Lubricate the pivots, bolts and nuts.
- Test the brakes before motorcycle operation.
- Use a dry cloth or chamois leather to absorb water residue. Do not allow water to stand on the motorcycle as this will lead to corrosion.
- Start the engine and run it for 5 minutes. Make sure that there is adequate ventilation for the exhaust fumes.

Gloss Paintwork Care

Gloss paintwork should be washed and dried as described previously, then protected using a high quality automotive polish. Always follow the manufacturer's instructions and repeat regularly to maintain your motorcycle's appearance.

Matt Paintwork Care

Matt paintwork requires no greater care than that already recommended for gloss paintwork.

- Do not use any polish or wax on matt paintwork.
- Do not try and polish out scratches.

Aluminium Items - not Lacquered or Painted

Items such as brake and clutch levers, wheels, engine covers, engine cooling fins, upper and lower yokes and throttle bodies on some models must be correctly cleaned to preserve their appearance. Please contact your dealer if you are unsure which components on your motorcycle are aluminium parts not protected by paint or lacquer, and for guidance on how to clean those items.

Use a proprietary brand of aluminium cleaner which does not contain abrasive or caustic elements.

Clean aluminium items regularly, in particular after use in inclement weather, where the components must be hand washed and dried each time the machine is used.

Warranty claims due to inadequate maintenance will not be allowed.

Chrome and Stainless Steel Care

All chrome and stainless steel parts of your motorcycle must be cleaned regularly to avoid a deterioration of its appearance.

Washing

Wash as previously described.

Drying

Dry the chrome and stainless steel parts as far as possible with a soft cloth or chamois leather.

Protecting

⚠ Caution

The use of products containing silicone will cause discolouration of the chrome and stainless steel parts and must not be used.

The use of abrasive cleaning products will damage the finish and must not be used.

When the chrome and stainless steel is dry, apply a suitable proprietary chrome cleaner on to the surface, following the manufacturer's instructions.

It is recommended that regular protection be applied to the motorcycle as this will both protect and enhance its appearance.

Black Chrome Care

Items such as headlight bowls and mirrors on some models must be correctly cleaned to preserve their appearance. Please contact your dealer if you are unsure which components on your motorcycle are black chrome parts. Maintain the appearance of black chrome items by rubbing a small amount of light oil into the surface.

Exhaust System Care

All parts of the exhaust system of your motorcycle must be cleaned regularly to avoid a deterioration of its appearance. These instructions can be applied to chrome, brushed stainless steel and carbon fibre components; matt painted exhaust systems should be cleaned as above, noting the care instructions in the Matt Paintwork section previously.

The exhaust system must be cool before washing to prevent water spotting.

Washing

Wash as previously described.

Make sure that no soap or water enters the exhausts.

Drying

Dry the exhaust system as far as possible with a soft cloth or chamois leather. Do not run the engine to dry the system or spotting will occur.

Protecting

Caution

The use of products containing silicone will cause discolouration of the chrome and stainless steel parts and must not be used.

The use of abrasive cleaning products will damage the finish and must not be used.

When the exhaust system is dry, apply a suitable proprietary motorcycle protection spray onto the surface, following the manufacturer's instructions.

It is recommended that regular protection be applied to the system as this will both protect and enhance the system's appearance.

Seat Care

Caution

Do not use chemicals or high pressure spray washers to clean the seat.

Using chemicals or high pressure spray washers may damage the seat cover.

To help maintain its appearance, carefully clean the seat using a sponge or cleaning cloth with soap and water.

Windscreen Care (if fitted)

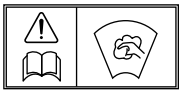

Warning

Never attempt to clean the windscreen while the motorcycle is in motion as releasing the handlebars may cause loss of motorcycle control and an accident.

Operation of the motorcycle with a damaged or scratched windscreen will reduce the rider's forward vision. Any such reduction in forward vision is dangerous and may lead to loss of motorcycle control and an accident.

Caution

Corrosive chemicals such as battery acid will damage the windscreen. Never allow corrosive chemicals to contact the windscreen.

Caution

Products such as window cleaning fluids, insect remover, rain repellent, scouring compounds, petrol or strong solvents such as alcohol, acetone, carbon tetrachloride, etc. will damage the windscreen.

Never allow these products to contact the windscreen.

Clean the windscreen with a solution of mild soap or detergent and clean, cold water.

After cleaning, rinse well and then dry with a soft, lint-free cloth.

If the transparency of the windscreen is reduced by scratches or oxidation which cannot be removed, the windscreen must be replaced.

Leather Products Care

It is recommend that the leather products are periodically cleaned with a damp cloth and allowed to dry naturally at room temperature. This will maintain the appearance of the leather and ensure the long life of the product.

The Triumph leather product is a natural product and lack of care can result in damage and permanent wear.

Follow these simple instructions to prolong the life of the leather product:

- Do not use household cleaning products, bleach, detergents containing bleach or any kind of solvent to clean the leather product.
- Do not immerse the leather product in water.
- Avoid direct heat from fires and radiators which can dry out and distort the leather.
- Do not leave the leather product in direct sunlight for prolonged periods of time.
- Do not dry the leather product by applying direct heat to it at any time.
- If the leather product does get wet, absorb any excess water with a soft clean cloth then leave the leather product to dry naturally at room temperature.
- Avoid exposure of the leather product to high levels of salt, for example sea/salt water or road surfaces that have been treated during the winter for ice and snow.
- If exposure to salt is unavoidable, clean the leather product immediately after each exposure using a damp cloth then leave the leather product to dry naturally at room temperature.
- Gently clean any minor marks with a damp cloth then leave the leather product to dry naturally at room temperature.
- Place the leather product in a fabric bag or cardboard box to protect it when in storage. Do not use a plastic bag.

Storage

Preparation for Storage

To prepare the motorcycle for storage, do the following:

- Clean and dry the entire vehicle thoroughly.
- Fill the fuel tank with the correct grade of unleaded fuel and add a suitable fuel stabiliser (if available), following the fuel stabiliser manufacturer's instructions.

Warning

Petrol is extremely flammable and can be explosive under certain conditions.

Turn the ignition switch off. Do not smoke.

Make sure the area is well ventilated and free from any source of flame or sparks; this includes any appliance with a pilot light.

- Remove one of the spark plugs from each cylinder and put several drops (5 ml) of engine oil into each cylinder. Cover the spark plug holes with a piece of cloth or rag. With the engine stop switch in the RUN position, push the starter button for a few seconds to coat the cylinder walls with oil. Install the spark plugs, tightening to 12 Nm.
- Change the engine oil and filter (see page 116).
- Check and if necessary correct the tyre pressures (see page 147).
- Set the motorcycle on a stand so that both wheels are raised off the ground. (If this cannot be done, put boards under the front and rear wheels to keep dampness away from the tyres.)
- Spray rust inhibiting oil (there are a host of products on the market and your authorised Triumph dealer will be able to offer you local advice) on all unpainted metal surfaces to prevent rusting. Prevent oil from getting on rubber parts, brake discs or in the brake calipers.
- Make sure the cooling system is filled with a 50% mixture of coolant (noting that HD4X Hybrid OAT coolant, as supplied by Triumph, is pre-mixed and requires no dilution) and distilled water solution (see page 118).
- Remove the battery, and store it where it will not be exposed to direct sunlight, moisture, or freezing temperatures. During storage it should be given a slow charge (one Ampere or less) about once every two weeks (see page 155).
- Store the motorcycle in a cool, dry area, away from sunlight, and with a minimum daily temperature variation.
- Put a suitable porous cover over the motorcycle to keep dust and dirt from collecting on it. Avoid using plastic or similar non-breathable, coated materials that restrict air flow and allow heat and moisture to accumulate.

Preparation after Storage

To prepare the motorcycle to be ridden after storage, do the following:

- Install the battery (if removed) (see page 156).
- If the motorcycle has been stored for more than four months, change the engine oil (see page 116).
- Check all the points listed in the Daily Safety Checks section.
- Before starting the engine, remove the spark plugs from each cylinder.
- Put the side stand down.
- Crank the engine on the starter motor several times until the oil pressure light goes out.
- Replace the spark plugs, tightening to 12 Nm, and start the engine.
- Check and if necessary correct the tyre pressures (see page 147).
- Check and if necessary adjust the drive chain tension (see page 126).
- Clean the entire vehicle thoroughly.
- Check the brakes for correct operation.
- Test ride the motorcycle at low speeds.

This page intentionally left blank

Table of Contents

Triumph Warranty Terms and Conditions - All except Canada 174
Triumph Warranty Terms and Conditions - Canada only 175
Conditions and Exclusions - All except Canada 176
Conditions and Exclusions - Canada Only 178
Noise Control System Warranty 179
Tampering With The Noise Control System Prohibited 180
Emission Control System Warranty 181
Triumph Overseas 182
Caring for your Motorcycle 184

Triumph Warranty Terms and Conditions - All except Canada

Thank you for choosing a Triumph motorcycle. This motorcycle is the product of Triumph's use of proven engineering, exhaustive testing, and continuous striving for superior reliability, safety, and performance.

This section of the Owner's Handbook includes details of the warranty and other useful information concerning your motorcycle.

Make sure that all your owner information is entered in the Triumph Motorcycle Service Handbook that is provided with the motorcycle.

Maintain maximum protection under warranty by making sure that your motorcycle is serviced in accordance with the recommendations of the scheduled maintenance chart in this Owner's Handbook.

If you should sell your motorcycle, make sure this Owner's Handbook together with all other relevant documents are passed to the new owner. Please advise the new owner that he or she can notify Triumph of the change of ownership by completing the form found on the Triumph web site at www.triumphmotorcycles.com.

All new Triumph motorcycles are covered by a 24 (Twenty-four) month unlimited mileage warranty, commencing from the date of first registration or the date of sale if the motorcycle remains unregistered.

Within the warranty period, TRIUMPH MOTORCYCLES LIMITED warrant the new Triumph motorcycle detailed in the Motorcycle Service Handbook to be free from any defect in materials used in the manufacture, and/or workmanship at the time of its manufacture.

Any part found to be defective during this period will be repaired or replaced at the discretion of TRIUMPH MOTORCYCLES LIMITED by an authorised Triumph dealer.

Any part replaced under the warranty will be covered for the remaining period of the warranty.

Any parts replaced under warranty must be returned to TRIUMPH MOTORCYCLES LIMITED by the dealer/distributor and will become the property of Triumph Motorcycles Ltd.

Triumph may, at its discretion make any repairs or replacement of defective parts falling outside the warranty, but such work shall not be deemed to be any admission of liability.

Triumph will bear labour charges for work carried out under the warranty.

The warranty may be transferred to subsequent owners for the balance of the remaining warranty period.

Australia Only

Our goods come with guarantees that cannot be excluded under the Australian Consumer Law. You are entitled to a replacement or refund for a major failure and compensation for any other reasonably foreseeable loss or damage. You are also entitled to have the goods repaired or replaced if goods fail to be of acceptable quality and the failure does not amount to a major failure.

Triumph Warranty Terms and Conditions - Canada only

Thank you for choosing a Triumph motorcycle. This motorcycle is the product of Triumph's use of proven engineering, exhaustive testing, and continuous striving for superior reliability, safety, and performance.

This section of the Owner's Handbook includes details of the warranty and other useful information concerning your motorcycle.

Make sure that all your owner information is entered in the Triumph Motorcycle Service Handbook that is provided with the motorcycle.

Maintain maximum protection under warranty by making sure your motorcycle is serviced in accordance with the recommendations of the scheduled maintenance chart in this Owner's Handbook.

If you should sell your motorcycle, make sure this Owner's Handbook together with the other relevant documents are passed to the new owner. Please advise the new owner that he or she can notify Triumph of the change of ownership by completing the form found on the Triumph web site at www.triumphmotorcycles.com.

All new Triumph motorcycles are covered by a 24 (Twenty-four) month unlimited mileage warranty, commencing from the date of first registration or the date of sale if the motorcycle remains unregistered.

Within the warranty period, TRIUMPH MOTORCYCLES AMERICA LIMITED warrant the new Triumph motorcycle detailed in the Motorcycle Service Handbook to be free from any defect in materials used in the manufacture, and/or workmanship at the time of its manufacture.

Any part found to be defective during this period will be repaired or replaced at the discretion of TRIUMPH MOTORCYCLES AMERICA LIMITED by an authorized Triumph dealer.

Any part replaced under the warranty will be covered for the remaining period of the warranty.

Any parts replaced under warranty must be returned to TRIUMPH MOTORCYCLES AMERICA LIMITED and will become the property of TRIUMPH MOTORCYCLES AMERICA LIMITED.

TRIUMPH MOTORCYCLES AMERICA LIMITED may, at its discretion make any repairs or replacement of defective parts falling outside the warranty, but such work shall not be deemed to be any admission of liability.

TRIUMPH MOTORCYCLES AMERICA LIMITED will bear labor charges for work carried out under the warranty.

The warranty may be transferred to subsequent owners for the balance of the remaining warranty period.

Conditions and Exclusions - All except Canada

1. The motorcycle must not have been used for competition, misused[1], inadequately or incorrectly serviced or maintained.
2. The motorcycle must not have been subject to any modification, repair or replacement other than as authorised by TRIUMPH MOTORCYCLES LIMITED.
3. The motorcycle must have been serviced as detailed in the manufacturers service maintenance schedule, at the intervals specified in the Triumph Owner's Handbook and the service log completed accordingly.
4. The motorcycle's exhaust silencers are warranted for 12 (twelve) months from the commencement of the general motorcycle warranty. During this 12 (twelve) month warranty period, internal corrosion or deformation of internal baffles are excluded from the warranty. After this 12 (twelve) month period, the motorcycle silencers are excluded from the terms of this warranty.
5. The motorcycle battery is warranted for 12 (twelve) months from the original date of purchase of the motorcycle. After this 12 (twelve) month period, the battery is excluded from the terms of this warranty. The battery supplied with the motorcycle must be provided with sufficient charge to replenish that lost by the operation of the starting mechanism and/or the use of electrical equipment whilst the engine is not running. If the motorcycle is placed in to storage, remove the battery, and store it where it will not be exposed to direct sunlight, moisture, or freezing temperatures. During storage it should be given a slow charge (one Ampere or less) approximately once every two weeks.

[1] Misuse includes any use not in accordance with the recommendations made in the 'how to ride the motorcycle' section of the Owner's Handbook and any use contrary to the warnings given in that same handbook. In addition, misuse will include, but not be limited to any use of the motorcycle which does not constitute normal road use.

The warranty does not cover:

- Defects caused by faulty adjustment, or repairs and alterations performed by a NON-AUTHORISED Triumph dealer are not covered by this warranty.
- Defects caused by the use of parts and accessories not authorised by TRIUMPH MOTORCYCLES LIMITED are not covered by this warranty.
- The cost of removal and replacement of parts and accessories, unless supplied as original equipment, or recommended by TRIUMPH MOTORCYCLES LIMITED.
- The cost of transportation of the motorcycle to or from the authorised Triumph dealer, or expenses incurred while the motorcycle is off the road for warranty repairs.
- Normal servicing and normal service items, such as spark plugs, oil and air filters are not covered by this warranty. Similarly items which are expected to wear as part of their normal function such as tyres, bulbs, chains, brake pads and clutch plates are also excluded, unless there is a manufacturing defect.
- Defects to the front fork oil seals as they are subject to wear and tear, including but not limited to damage caused by stone chips to the inner fork tubes.
- Seats, luggage, paint, chrome, polished aluminium items, or trim deterioration caused by normal wear and tear, exposure or lack of correct maintenance.
- Motorcycles used on a commercial basis.
- Defects which have not been reported to an authorised dealer within ten days of discovery of the defect.
- Motorcycles which have been inadequately lubricated, or for which the wrong fuel or lubricant has been used.

Should a warranty claim become necessary, Triumph Motorcycles and its authorised dealers shall not be liable for loss of use, inconvenience, lost time, commercial losses or other incidental or consequential damages.

This warranty shall be interpreted in accordance with English law and any question arising from this warranty shall be subject to the jurisdiction of the English courts.

Any statement, condition, representation, description or warranty otherwise contained in any catalogue, advertisement or other publication shall not be construed as enlarging, varying or overriding anything contained herein.

Triumph Motorcycles reserve the right to make alterations or improvements without notification to any model or motorcycle without obligation to do so to motorcycles already sold.

This warranty does not affect your statutory rights.

Conditions and Exclusions - Canada Only

1. The motorcycle must not have been used for competition, misused[2], inadequately or incorrectly serviced or maintained.
2. The motorcycle must not have been subject to any modification, repair or replacement other than as authorised by TRIUMPH MOTORCYCLES AMERICA LIMITED.
3. The motorcycle battery is warranted for 12 (twelve) months from the original date of purchase of the motorcycle. After this 12 (twelve) month period, the battery is excluded from the terms of this warranty. The battery supplied with the motorcycle must be provided with sufficient charge to replenish that lost by the operation of the starting mechanism and/or the use of electrical equipment whilst the engine is not running. If the motorcycle is placed in to storage, remove the battery, and store it where it will not be exposed to direct sunlight, moisture, or freezing temperatures. During storage it should be given a slow charge (one Ampere or less) approximately once every two weeks.

The warranty does not cover:

- The cost of transportation of the motorcycle to or from the authorised Triumph dealer, or expenses incurred while the motorcycle is off the road for warranty repairs.
- Defects caused by the use of parts and accessories not authorised by TRIUMPH MOTORCYCLES AMERICA LIMITED.
- Defects caused by faulty adjustment, or repairs and alterations performed by a NON-AUTHORISED Triumph dealer.
- The cost of removal and replacement of parts and accessories, unless supplied as original equipment, or recommended by TRIUMPH MOTORCYCLES AMERICA LIMITED.
- Normal servicing and normal service items, such as spark plugs, oil and air filters are not covered by this warranty. Similarly items which are expected to wear as part of their normal function such as tyres, bulbs, chains, brake pads and clutch plates are also excluded, unless there is a manufacturing defect.
- Defects to the front fork oil seals as they are subject to wear and tear, including but not limited to damage caused by stone chips to the inner fork tubes.

[2] Misuse includes any use not in accordance with the recommendations made in the 'how to ride the motorcycle' section of the Owner's Handbook and any use contrary to the warnings given in that same handbook. In addition, misuse will include, but not be limited to any use of the motorcycle which does not constitute normal road use.

- Seats, luggage, paint, chrome, polished aluminium items, or trim deterioration caused by normal wear and tear, exposure or lack of correct maintenance.
- Motorcycles used on a commercial basis.
- Defects which have not been reported to an authorised dealer within ten days of discovery of the defect.
- Motorcycles which have been inadequately lubricated, or for which the wrong fuel or lubricant has been used.

Should a warranty claim become necessary, TRIUMPH MOTORCYCLES AMERICA LIMITED and its authorised dealers shall not be liable for loss of use, inconvenience, lost time, commercial losses or other incidental or consequential damages.

Any statement, condition, representation, description or warranty otherwise contained in any catalog, advertisement or other publication shall not be construed as enlarging, varying or overriding anything contained herein.

TRIUMPH MOTORCYCLES AMERICA LIMITED reserve the right to make alterations or improvements without notification to any model or motorcycle without obligation to do so to motorcycles already sold.

This warranty does not affect your statutory rights.

Noise Control System Warranty

Warning

This product should be checked for repair or replacement if the motorcycle noise has increased significantly through use, otherwise the owner may become subject to penalties under state and local ordinances.

The following warranty applies to the noise control system and is in addition to the general Triumph warranty and the emission control warranty.

Per 40 C.F.R. § 205.173-1, Triumph Motorcycles America Limited, warrants that this exhaust system, at the time of sale, meets all applicable U.S E.P.A. federal noise standards. This warranty extends to the first person who buys this exhaust system for purposes other than resale, and to all subsequent buyers. Warranty claims should be directed to an authorised Triumph Motorcycles America dealer.

Triumph Motorcycles America Limited warrants to the first, and each subsequent owner, that the vehicle was designed and built so as to conform, at the time of sale, with the regulations of Environment Canada (as tested following F-76 Drive-By test procedure) and, at the time of manufacture, was free from defects in materials and workmanship which would cause the motorcycle not to meet the Environment Canada Standards. This noise control system warranty extends for a period of 1 calendar year or 6,000 kms whichever occurs first from the date on which the motorcycle was delivered to the first retail purchaser or, in the case of a demonstration motorcycle or company motorcycle, the date on which the company placed the motorcycle in service prior to retail sale.

Tampering With The Noise Control System Prohibited

Owners are warned that the law prohibits:

(a) The removal or rendering inoperative by any person other than for purposes of maintenance, repair or replacement, of any device or element of design incorporated into any new vehicle for the purpose of noise control prior to its sale or delivery to the ultimate purchaser or while it is in use; and

(b) the use of the vehicle after such device or element of design has been removed or rendered inoperative by any person.

Acts which are likely to constitute tampering include the following:

1. Removal or tampering with the mufflers, baffles or header pipes or any other component which conducts exhaust gases.
2. Removal of or puncturing of any part of the air intake system.
3. Failure to carry out maintenance as prescribed in the owner's manual.
4. Replacement of any parts of the exhaust or air intake system with parts other than those specified by Triumph Motorcycles America Limited.

The following items are not covered by the noise control system warranty:

1. Failures which arise through misuse, alterations or accident damage.
2. Replacing, removing, or modifications of any part of the noise control system (consisting of the exhaust system and air intake system) with parts not certified to be noise legal for street use.
3. Triumph Motorcycles America Limited and its authorized dealers shall not be liable for loss of use, inconvenience, lost time, commercial losses or other incidental or consequential damages.
4. Any motorcycle which has had the odometer recorded mileage changed so that the correct mileage of the motorcycle cannot be accurately determined.

Emission Control System Warranty

The following warranty applies to the emission control system and is in addition to the general Triumph warranty and the noise control system warranty.

Triumph Motorcycles America Limited warrants to the first, and each subsequent owner, that the vehicle was designed and built so as to conform, at the time of sale, with the regulations of Environment Canada and, at the time of manufacture, was free from defects in materials and workmanship which would cause the motorcycle not to meet Environment Canada Standards. This emission control system warranty extends for a period of 5 calendar years or 30,000 kms whichever occurs first, from the date on which the motorcycle was delivered to the first retail purchaser or, in the case of a demonstration motorcycle or company motorcycle, the date on which the company placed the motorcycle in service prior to retail sale.

The following are not covered by the Emission Control System warranty:

1. Failures which arise through misuse, alterations, accident damage or failure to carry out maintenance as described in the owner's manual.
2. The replacement of any parts required in the maintenance of the emission control system.
3. Triumph Motorcycles America Limited and its authorized dealers shall not be liable for loss of use, inconvenience, lost time, commercial losses or other incidental or consequential damages.
4. Any motorcycle which has had the odometer recorded mileage changed so that the correct mileage of the motorcycle cannot be accurately determined.

This warranty period starts the date the motorcycle is delivered to the first retail purchaser or, if the motorcycle is placed in service as a demonstrator or company motorcycle prior to sale at retail, the date it is first placed in service.

The emission control system of each new Triumph motorcycle was designed, built and tested using only genuine Triumph motorcycle parts and with these parts the motorcycle is certified as being in conformity with Environment Canada emission control regulations.

WE RECOMMEND THAT ONLY GENUINE TRIUMPH MOTORCYCLE PARTS BE USED FOR MAINTENANCE REPAIR OR REPLACEMENT OF THE EMISSION CONTROL SYSTEM.

Triumph Overseas

If you are travelling abroad and require assistance or advice from a Triumph dealer, contact the subsidiary or importer for the country which you are visiting.

Subsidiary offices are listed below.

For an up to date list of authorised Triumph dealers and importers, visit www.triumphmotorcycles.co.uk.

Subsidiary Offices

Benelux

Triumph Netherlands

Tel: +31 725 41 0311

Email: Benelux@Triumph.co.uk

Brazil

Triumph Motorcycles Brazil Ltda

Tel: +55 11 3010 1010

Email: sac.triumph@europ-assistance.com.br

China

British Triumph (Shanghai) Trading Co., Ltd.

Room 302, Tower 11,

1250, Xinzha Road, Jingan District, Shanghai, PRC

200041

Tel: +86 21 6140 9180

Email: aftersales.china@triumphmotorcycles.com

Denmark/Finland/Norway/Sweden

Triumph Motorcycles AB

Tel: +46 8 680 68 00

Fax: +46 8 680 07 85

France

Triumph S.A.

Tel: +33 1 64 62 3838

Fax: +33 1 64 80 5828

Germany

Triumph Motorrad Deutschland GmbH

Tel: +49 6003 829090

Fax: +49 6003 8290927

India

Triumph Motorcycles (India) Private Limited

Tel: 1 800 3000 0051 (toll free)

Email:
customer.care@triumphmotorcycles.in

Italy

Triumph Motorcycles srl

Tel: +39 02 93 454525

Fax: +39 02 93 582575

Japan

Triumph Motorcycles Japan K.K.

Tel: +81 3 6453 9810

Fax: +81 3 6453 9811

Spain/Portugal

Triumph Motocicletas España, S.L

Tel: +34 91 637 7475

Fax: +34 91 636 1134

Thailand

Triumph Thailand

Tel: +66(0)20170333

Fax: +66(0)20170330

United Kingdom/Eire

Triumph Motorcycles Ltd

Tel: +44 1455 45 5012

Fax: +44 1455 45 2211

USA

Triumph Motorcycles (America) Ltd

Tel: +1 678 854 2010

Fax: +1 678 854 8740

Caring for your Motorcycle

Triumph Motorcycles have taken great care in the selection of materials, plating and painting techniques so as to provide its customers with a quality cosmetic appearance allied to durability. However, motorcycles are often used in hostile environmental conditions and in these circumstances it is essential that the motorcycle is washed, dried and lost lubricity replaced to prevent discolouration particularly of plated and unplated metallic surfaces. Your dealer can provide further information and advice if required. Ultimately the appearance of your motorcycle will very much depend on the care it receives.

For further information in regards to caring for your motorcycle, refer to the Cleaning and Storage section of this Owner's Handbook.

SPECIFICATIONS - SCRAMBLER 1200 XC AND XE

Dimensions, Weights and Performance
A list of model specific dimensions, weights and performance figures is available from your authorised Triumph dealer, or on the Internet at www.triumph.co.uk.

Payload	Scrambler 1200 XC	Scrambler 1200 XE
Maximum Payload	210 kg	210 kg

Engine	Scrambler 1200 XC	Scrambler 1200 XE
Type	Liquid cooled parallel twin, 270° firing angle	Liquid cooled parallel twin, 270° firing angle
Displacement	1200 cc	1200 cc
Bore x Stroke	97.6 x 80 mm	97.6 x 80 mm
Compression Ratio	11:1	11:1
Cylinder Numbering	Left to right	Left to right
Cylinder Sequence	1-2	1-2
Firing Order	1-2	1-2
Starting System	Electric starter	Electric starter

Lubrication	Scrambler 1200 XC	Scrambler 1200 XE
Lubrication System	Wet sump	Wet sump
Engine Oil Capacities:		
Dry Fill	3.8 litres	3.8 litres
Oil/Filter Change	3.4 litres	3.4 litres
Oil Change Only	3.2 litres	3.2 litres

Cooling	Scrambler 1200 XC	Scrambler 1200 XE
Coolant Type	Triumph HD4X Hybrid OAT	Triumph HD4X Hybrid OAT
Water/Coolant Ratio	50/50 (pre-mixed as supplied by Triumph)	50/50 (pre-mixed as supplied by Triumph)
Coolant Capacity	1.89 litres	1.89 litres
Thermostat Opens	88°C +/- 2°C	88°C +/- 2°C

SPECIFICATIONS - SCRAMBLER 1200 XC AND XE

Fuel System	Scrambler 1200 XC	Scrambler 1200 XE
Type	Electronic fuel injection	Electronic fuel injection
Fuel Pump	Submerged electronic	Submerged electronic
Fuel Pressure (nominal)	3.5 bar	3.5 bar

Fuel	Scrambler 1200 XC	Scrambler 1200 XE
Type	91 RON unleaded	91 RON unleaded
Tank Capacity	16.0 litres	16.0 litres

Ignition	Scrambler 1200 XC	Scrambler 1200 XE
Ignition System	Digital inductive	Digital inductive
Spark Plug	NGK LMAR8A-9	NGK LMAR8A-9
Spark Plug Gap	0.9 mm +0.0/-0.1 mm	0.9 mm +0.0/-0.1 mm

Transmission	Scrambler 1200 XC	Scrambler 1200 XE
Transmission Type	6 speed, constant mesh	6 speed, constant mesh
Clutch Type	Wet, multiplate	Wet, multiplate
Final Drive Chain	EK 525 ZVX3, 110 link	EK 525 ZVX3, 114 link
Primary Drive Ratio	93/74 (1.26)	93/74 (1.26)
Gear Ratio:		
1st	49/14 (3.5)	49/14 (3.5)
2nd	45/18 (2.5)	45/18 (2.5)
3rd	37/20 (1.85)	37/20 (1.85)
4th	37/25 (1.48)	37/25 (1.48)
5th	35/27 (1.3)	35/27 (1.3)
6th	34/29 (1.17)	34/29 (1.17)
Final Drive Ratio	44/16 (2.75)	44/16 (2.75)

Approved Tyres

A list of approved tyres specific to these models is available from your authorised Triumph dealer, or on the Internet at www.triumph.co.uk.

Approved Mud and Snow/Dual Purpose Tyres

A list of approved mud and snow/dual purpose tyres specific to these models is available from your authorised Triumph dealer, or on the Internet at www.triumph.co.uk.

Warning

The use of mud and snow/dual purpose tyres will result in reduced motorcycle stability.

Always operate a motorcycle equipped with mud and snow/dual purpose tyres at reduced speeds. The permissible maximum speed is 60 mph (100 km/h). This is also shown on a warning sticker on the motorcycle.

Operation of the motorcycle above the permissible maximum speed may result in loss of motorcycle control and an accident.

Warning

Tyre pressures which have been reduced for off-road riding will impair on-road stability.

Always make sure that the tyre pressures are set as described in the Specifications section for on-road use.

Operation of the motorcycle with incorrect tyre pressures may cause loss of motorcycle control leading to an accident.

Warning

Use the recommended tyres ONLY in the combinations given.

Do not mix tyres from different manufacturers or mix different specification tyres from the same manufacturers as this may result in loss of motorcycle control and an accident.

SPECIFICATIONS - SCRAMBLER 1200 XC AND XE

Tyres	Scrambler 1200 XC	Scrambler 1200 XE
Tyre Sizes:		
Front	90/90-21 54H	90/90-21 54H
Rear	150/70R17 69V	150/70R17 69V
Tyre Pressures (Cold) - all except Pirelli Scorpion™ Rally:		
Front	2.5 bar (36 lbs/in ^{2})	2.5 bar (36 lbs/in ^{2})
Rear	2.9 bar (42 lbs/in ^{2})	2.9 bar (42 lbs/in ^{2})
Tyre Pressures (Cold) - Pirelli Scorpion™ Rally only:		
Front	2.5 bar (36 lbs/in ^{2})	2.5 bar (36 lbs/in ^{2})
Rear	2.62 bar (38 lbs/in ^{2})	2.62 bar (38 lbs/in ^{2})

Electrical Equipment	Scrambler 1200 XC	Scrambler 1200 XE
Battery Type	YTZ10S	YTZ10S
Battery Rating	12 Volt, 8.6 Ah	12 Volt, 8.6 Ah
Alternator	18 Amps at 1,000 rpm	18 Amps at 1,000 rpm
	33 Amps at 6,000 rpm	33 Amps at 6,000 rpm
Headlight	LED	LED
Tail/Brake Light	LED	LED
Directional Indicator Lights	LED	LED
License Plate Light	LED	LED

Frame	Scrambler 1200 XC	Scrambler 1200 XE
Rake	25.8°	26.9°
Trail	121 mm (4.76 in)	129 mm (5.01 in)

Tightening Torques	
Battery Terminals	4.5 Nm
Chain Adjuster Lock Nuts	20 Nm
Chain Guard - Front Fixing	4 Nm
Chain Guard - Rear Fixing	9 Nm
Clutch Lever Nut	3.4 Nm
Oil Filter	10 Nm
Spark Plug	12 Nm
Storage Box Front Fixings	5 Nm
Storage Box Rear Fixing	3 Nm
Sump Plug	25 Nm
Rear Wheel Spindle Nut	110 Nm

Fluids and Lubricants	
Bearings and Pivots	Grease to NLGI 2 specification
Brake Fluid	DOT 4 brake fluid
Coolant	Triumph HD4X Hybrid OAT coolant (pre-mixed)
Drive Chain	Chain spray suitable for XW-ring chains
Engine Oil	Semi or fully synthetic 10W/40 or 10W/50 motorcycle engine oil which meets specification API SH (or higher) and JASO MA, such as Castrol Power 1 Racing 4T 10W-40 (fully synthetic) engine oil, sold as Castrol Power RS Racing 4T 10W-40 (fully synthetic) in some countries.

This page intentionally left blank

SPECIFICATIONS - SCRAMBLER STEVE MCQUEEN EDITION

Dimensions, Weights and Performance
A list of model specific dimensions, weights and performance figures is available from your authorised Triumph dealer, or on the Internet at www.triumph.co.uk.

Payload	Scrambler 1200 Steve McQueen Edition
Maximum Payload	210 kg

Engine	Scrambler 1200 Steve McQueen Edition
Type	Liquid cooled parallel twin, 270° firing angle
Displacement	1200 cc
Bore x Stroke	97.6 x 80 mm
Compression Ratio	11:1
Cylinder Numbering	Left to right
Cylinder Sequence	1-2
Firing Order	1-2
Starting System	Electric starter

Lubrication	Scrambler 1200 Steve McQueen Edition
Lubrication System	Wet sump
Engine Oil Capacities:	
Dry Fill	3.8 litres
Oil/Filter Change	3.4 litres
Oil Change Only	3.2 litres

Cooling	Scrambler 1200 Steve McQueen Edition
Coolant Type	Triumph HD4X Hybrid OAT
Water/Coolant Ratio	50/50 (pre-mixed as supplied by Triumph)
Coolant Capacity	1.89 litres
Thermostat Opens	88°C +/- 2°C

SPECIFICATIONS - SCRAMBLER STEVE MCQUEEN EDITION

Fuel System	Scrambler 1200 Steve McQueen Edition
Type	Electronic fuel injection
Fuel Pump	Submerged electronic
Fuel Pressure (nominal)	3.5 bar

Fuel	Scrambler 1200 Steve McQueen Edition
Type	91 RON unleaded
Tank Capacity	16.0 litres

Ignition	Scrambler 1200 Steve McQueen Edition
Ignition System	Digital inductive
Spark Plug	NGK LMAR8A-9
Spark Plug Gap	0.9 mm +0.0/-0.1 mm

Transmission	Scrambler 1200 Steve McQueen Edition
Transmission Type	6 speed, constant mesh
Clutch Type	Wet, multiplate
Final Drive Chain	EK 525 ZVX3, 114 link
Primary Drive Ratio	93/74 (1.26)
Gear Ratio:	
1st	49/14 (3.5)
2nd	45/18 (2.5)
3rd	37/20 (1.85)
4th	37/25 (1.48)
5th	35/27 (1.3)
6th	34/29 (1.17)
Final Drive Ratio	44/16 (2.75)

Approved Tyres

A list of approved tyres specific to these models is available from your authorised Triumph dealer, or on the Internet at www.triumph.co.uk.

Approved Mud and Snow/Dual Purpose Tyres

A list of approved mud and snow/dual purpose tyres specific to these models is available from your authorised Triumph dealer, or on the Internet at www.triumph.co.uk.

Warning

The use of mud and snow/dual purpose tyres will result in reduced motorcycle stability.

Always operate a motorcycle equipped with mud and snow/dual purpose tyres at reduced speeds. The permissible maximum speed is 60 mph (100 km/h). This is also shown on a warning sticker on the motorcycle.

Operation of the motorcycle above the permissible maximum speed may result in loss of motorcycle control and an accident.

Warning

Tyre pressures which have been reduced for off-road riding will impair on-road stability.

Always make sure that the tyre pressures are set as described in the Specifications section for on-road use.

Operation of the motorcycle with incorrect tyre pressures may cause loss of motorcycle control leading to an accident.

Warning

Use the recommended tyres ONLY in the combinations given.

Do not mix tyres from different manufacturers or mix different specification tyres from the same manufacturers as this may result in loss of motorcycle control and an accident.

SPECIFICATIONS - SCRAMBLER STEVE MCQUEEN EDITION

Tyres	Scrambler 1200 Steve McQueen Edition
Tyre Sizes:	
Front	90/90-21 54H
Rear	150/70R17 69V
Tyre Pressures (Cold) - all except Pirelli Scorpion™ Rally:	
Front	2.5 bar (36 lbs/in ^{2})
Rear	2.9 bar (42 lbs/in ^{2})
Tyre Pressures (Cold) - Pirelli Scorpion™ Rally only:	
Front	2.5 bar (36 lbs/in ^{2})
Rear	2.62 bar (38 lbs/in ^{2})

Electrical Equipment	Scrambler 1200 Steve McQueen Edition
Battery Type	YTZ10S
Battery Rating	12 Volt, 8.6 Ah
Alternator	18 Amps at 1,000 rpm
	33 Amps at 6,000 rpm
Headlight	LED
Tail/Brake Light	LED
Directional Indicator Lights	LED
License Plate Light	LED

Frame	Scrambler 1200 Steve McQueen Edition
Rake	26.9°
Trail	129 mm (5.01 in)

SPECIFICATIONS - SCRAMBLER STEVE MCQUEEN EDITION

Tightening Torques	Scrambler 1200 Steve McQueen Edition
Battery Terminals	4.5 Nm
Chain Adjuster Lock Nuts	20 Nm
Chain Guard - Front Fixing	4 Nm
Chain Guard - Rear Fixing	9 Nm
Clutch Lever Nut	3.4 Nm
Oil Filter	10 Nm
Spark Plug	12 Nm
Storage Box Front Fixings	5 Nm
Storage Box Rear Fixing	3 Nm
Sump Plug	25 Nm
Rear Wheel Spindle Nut	110 Nm

Fluids and Lubricants	Scrambler 1200 Steve McQueen Edition
Bearings and Pivots	Grease to NLGI 2 specification
Brake Fluid	DOT 4 brake fluid
Coolant	Triumph HD4X Hybrid OAT coolant (pre-mixed)
Drive Chain	Chain spray suitable for XW-ring chains
Engine Oil	Semi or fully synthetic 10W/40 or 10W/50 motorcycle engine oil which meets specification API SH (or higher) and JASO MA, such as Castrol Power 1 Racing 4T 10W-40 (fully synthetic) engine oil, sold as Castrol Power RS Racing 4T 10W-40 (fully synthetic) in some countries.

SPECIFICATIONS - SCRAMBLER STEVE MCQUEEN EDITION

This page intentionally left blank

A

Accessories 103
Anti-lock Braking System (ABS) 98
Enable 72
Optimised Cornering ABS 98
Warning Light 27

B

Bank Angle Indicators 146
Battery 152
Charging 155
Discharge 154
Disposal 153
Installation 156
Maintenance 153
Removal 152
Storage 154
Brakes
Anti-Lock Braking System (ABS) 98
Brake Lever Adjuster 77, 78
Brake Wear Inspection 128
Braking 95
Breaking in New Pads and Discs 129
Disc Brake Fluid 130
Front Brake Fluid Adjustment 131
Front Brake Fluid Inspection 131
Light Switches 134
Optimised Cornering ABS 98
Pad Wear Compensation 129
Rear Brake Fluid Adjustment 132
Rear Brake Fluid Inspection 132
Rear Brake Pedal Adjustment 134

C

Cleaning
After Washing 164
Aluminium Items - not Lacquered or Painted 165
Black Chrome Items 166
Care of Leather Products 169
Chrome and Stainless Steel 165
Exhaust System 166
Frequency of Cleaning 162
Gloss Paintwork 164
Matt Paintwork 164
Preparation for Washing 162
Seat Care 167
Washing 163
Where to be Careful 163
Windscreen 168
Clutch 123
Adjustment 123
Inspection 123
Lever Adjustment 78, 79
Cooling System 118
Coolant Change 121
Coolant Level Inspection 120
Coolant Temperature 40
Corrosion Inhibitors 119
Level Adjustment 121
Specifications 185, 191
Cruise Control 69
Activating 69
Button 67
Deactivating 70

D

Daily Safety Checks 90
Daytime Running Lights (DRL) 29
Switch 65
Direction Indicators
Lights 160
Mode Selection 47
Switch 66
Warning Light 28
Drive Chain 124
Lubrication 125
Movement Adjustment 126
Movement Inspection 125
Wear Inspection 127

E

Electrical Equipment
Specifications 188, 194
Engine
Moving Off 93
Serial Number 19
Specifications 185, 191
Starting the Engine 93
Stopping the Engine 92

Engine Oil ... 114
Disposal of Oil and Filters ... 117
Level Inspection ... 115
Low Oil Pressure Warning Light ... 26
Oil Filter Change ... 116
Specification and Grade ... 118
Engine Start/Stop Switch
Power ON/OFF Position ... 64
QUICK START Position ... 64
RUN Position ... 64
STOP Position ... 64

F

Fluids
Specifications ... 189, 195
Fog Lights
Switch ... 67
Frame
Specifications ... 188, 194
Fuel
Filling the Fuel Tank ... 83
Fuel Grade ... 80
Fuel Tank Cap ... 82
Gauge ... 30
Low Fuel Warning Light ... 29
Refuelling ... 81
Specifications ... 186, 192
Status Information ... 39
System Specifications ... 186, 192
Fuel Tank
Filling ... 83
Fuses
Fuse Box Location ... 157
Fuse Identification ... 157

G

Gears
Changing ... 94
Gear Position Display ... 31
Shift Indicator Display ... 53

H

Handlebars
Adjustment ... 135
Hazards
Warning Lights ... 29
Warning Lights Button ... 63
Headlights ... 158
Adjustment ... 159
Heated Grips ... 67
Switch ... 67
High Beam
Button ... 68
Indicator Light ... 29
High Speed Operation ... 101
HOME Button ... 64
Horn Button ... 66

I

Ignition
Keyless ... 61
Smart Key ... 59
Specifications ... 186, 192
Immobiliser
Indicator Light ... 27
Instruments
Clock Display ... 55
Contrast ... 36
Coolant Temperature ... 40
Date Display ... 56
Detail ... 37
Display Brightness ... 52
Display Set Up ... 51
Fuel Gauge ... 30
Fuel Status ... 39
Gear Position Display ... 31
Information Tray ... 35
Language Options ... 54
Main Menu ... 42
Odometer ... 41
Panel Adjustment ... 58
Panel Display ... 24
Reset To Defaults ... 57
Rider Name Display ... 54
Riding Modes ... 32
Service Indicator ... 41
Shift Indicator ... 53
Speedometer ... 30
Tachometer ... 30
Themes ... 37, 51

Trip Meters ... 38
Tyre Pressure Monitoring System (TPMS) 41
Units Display ... 55
Visible Tray ... 52
Warning Lights ... 26
Warnings and Messages ... 36

J

Joystick Button ... 66

K

Key ... 59
Keyless Ignition ... 61

L

Left Handlebar Switches ... 65
Joystick Button ... 66
License Plate Light ... 160
Lights
Directional Indicators ... 160
Hazards ... 29
Rear Light ... 159
Loading ... 104
Lubrication
Specifications ... 185, 191

M

Maintenance
Scheduled Maintenance ... 109
Master Ignition Switch (if fitted) ... 62
Mirrors ... 135
MODE Button ... 65
Multifunctional Rear Lights ... 159

O

Odometer ... 41

P

Parking ... 100
Parts Identification ... 16
Rider View ... 18
Passengers ... 105
Payload
Specifications ... 185, 191

R

Rear Light ... 159
Riding Modes ... 32
Configuration ... 44
Selection ... 33
Settings ... 43
Right Handlebar Switches ... 63
HOME Button ... 64
Running-In ... 89

S

Safety
Fuel and Exhaust Fumes ... 08
Handlebars and Footrests ... 12, 13
Helmet and Clothing ... 09
Maintenance and Equipment ... 10
Parking ... 09
Parts and Accessories ... 10
Riding ... 11
The Motorcycle ... 07
Seats
Installation ... 87
Removal ... 87
Seat Care ... 86, 167
Seat Lock ... 86
Storage ... 87
Service
Indicator Announcement ... 41
Interval Set Up ... 48
Side Panels ... 85
Refit ... 85
Removal ... 85
Smart Key ... 59
Battery Replacement ... 60
Specifications ... 185, 191
Stand
Centre Stand ... 84
Side Stand ... 83
Steering
Inspection ... 137
Storage
Preparation after Storage ... 171
Preparation for Storage ... 170
Suspension
Front Compression Damping Adjustment 141
Front Fork Inspection ... 142
Front Preload Adjustment ... 140

Front Rebound Damping Adjustment..... 141
Front Settings..... 139
Rear Compression Damping Adjustment 145
Rear Rebound Damping Adjustment..... 145
Rear Settings..... 143
Rear Spring Preload Adjustment..... 144

T

Themes
Set Up..... 51
Throttle Control..... 79
Brake Use..... 80
Inspection..... 122
Tool Kit..... 85
Torque Specifications..... 189, 195
Traction Control (TC)..... 71
Disabled Warning Light..... 28
Enable/Disable..... 48
Indicator Light..... 28
Optimised Cornering Traction Control..... 72
Settings..... 72
Transmission
Specifications..... 186, 192
Trip Meters..... 38
Automatic Reset..... 50
Manual Reset..... 49
Set Up..... 49
Trip 2 Enable/Disable..... 50
Tyre Pressure Monitoring System (TPMS)..... 73
Instruments..... 41
Replacement Tyres..... 76
Sensor Batteries..... 75
Sensor Serial Number..... 74
System Fault..... 76
Tyre Pressure Warning Light..... 75
Tyre Pressures..... 76, 148
Tyres..... 146, 205
Minimum Tread Depth..... 149
Replacement..... 76, 149
Specifications..... 188, 194
Tyre Inflation Pressures..... 147
Tyre Pressures..... 76
Tyre Wear..... 148

U

Universal Serial Bus (USB) Socket..... 88

V

Vehicle Identification Number (VIN)..... 19

W

Warnings..... 03
Maintenance..... 03
Noise Control System..... 04
Owner's Handbook..... 04
Warning Label Locations..... 14, 15
Warning Labels..... 03
Warning Lights..... 26
Wheel Bearings
Inspection..... 138
Windscreen
Cleaning..... 168

This page intentionally left blank

APPROVAL INFORMATION

This section contains approval information that is required to be included in this Owner's Handbook.

Radio Equipment Device EU Directive 2014/53

Triumph motorcycles are equipped with a range of radio equipment devices. These radio equipment devices must comply with the EU Radio Equipment Device Directive 2014/53/EU. The complete text of the EU declaration of conformity for each radio equipment device is available at the following address:

www.triumphmotorcycles.co.uk/public-content/triumph-radio-device-approvals

The table below shows the frequencies and power levels for the radio equipment devices in compliance with the EU Directive 2014/53/EU. The table shows all radio equipment devices used across the Triumph range of motorcycles. Only certain radio equipment devices in the table are applicable to specific motorcycles.

Radio Equipment Device	Frequency Range	Maximum Transmit Power Level	Manufacturer
Chassis Control Unit	Receive Bands: 433.92 MHz, 134.2 kHz Category-2 Receiver Transmit Bands: 134.2 kHz Class 1 Transmitter Fixed Inductive Loop Coil Antenna	287 nW ERP	Pektron Alfreton Road, Derby, DE21 4AP UK
Keyless Control Unit	Receive Bands: 433.92 MHz, 134.2 kHz Category-2 Receiver Transmit Bands: 134.2 kHz Class 1 Transmitter Fixed Inductive Loop Coil Antenna	6.28 uW ERP	
Keyless Control Unit 2	Receive Bands: 433.92 MHz, 134.2 kHz Category-2 Receiver Transmit Bands: 134.2 kHz Class 1 Transmitter Fixed Inductive Loop Coil Antennas	3.01 uW ERP	
Keyless System Key Fob	Receive Bands: 134.2 kHz Category-2 Receiver Transmit Bands: 433.92 MHz, 134.2 kHz Class: N/A Antenna Type Fixed Antenna (PCB)	0.019 mW ERP	

Radio Equipment Device	Frequency Range	Maximum Transmit Power Level	Manufacturer
Immobiliser (Motorcycles with Key System)	Receive Bands: 433.92 MHz, 125 kHz Transmit Bands: 120.9 KHz to 131.3 KHz	5dBµA/m @ 10m	LDL Technology Parc Technologique Du Canal, 3 Rue Giotto, 31520 Ramonville Saint-Agne, France
Tyre Pressure Monitoring System (TPMS)	Receive Bands: None Transmit Bands: 433.97 MHz to 433.87 MHz	0.063 mW	
Triumph Accessory Alarm System ECU	Receive Bands: 433.92 MHz Transmit Bands: None	N/A	Scorpion Automotive Ltd Drumhead Road, Chorley North Business Park, Chorley, PR6 7DE UK
Triumph Accessory Alarm System Remote/ Key Fob	Receive Bands: None Transmit Bands: 433.92 MHz	10 mW ERP	
Accessory Alarm System ECU - Triumph Protect+	Receive Bands: 433.92 MHz Transmit Bands: None	N/A	
Accessory Alarm System Remote/Key Fob - Triumph Protect+	Receive Bands: None Transmit Bands: 433.92 MHz	1 mW ERP	
Instrument Panel	Receive and Transmit Bands: 2402 MHz to 2483.5 MHz	7.4 dBm	MTA SpA Viale dell'Industria, 12 26845 Codogno (LO) Italy
My Triumph Connectivity Unit	Receive and Transmit Bands: 2402 MHz to 2480 MHz	100 mW	C.O.B.O. S.p.A. via Tito Speri 10 25024 Leno (BS) Italy
Blind Spot Radar	Receive and Transmit Bands: 24.05 to 24.25 GHz	100mW (20 dBm) peak EIRP	ADC Automotive Distance Control Systems GmbH Peter-Dornier-Strasse 10, 88131 Lindau, Germany

Representative within the European Union

Address

Triumph Motocicletas Espana S.L.
C/Cabo Rufino Lazaro
14 - E
28232 - Las Rozas De Madrid
Spain

Tyres

With reference to the Pneumatic Tyres and Tubes for Automotive Vehicles (Quality Control) Order, 2009, Cl. No. 3 (c), it is declared by M/s. Triumph Motorcycles Ltd. that the tyres fitted on this motorcycle meet the requirements of IS 15627: 2005 and comply with the requirements under Central Motor Vehicle Rules (CMVR), 1989.

Smart Keyless System Approval

The Smart Keyless system complies with IC-RSS-210 Industry Canada. Operation is subject to the following conditions:

1. This device may not cause harmful interference.
2. This device must accept interference received, including interference that may cause undesired operation.

Canada IC: 10176A-009

Model No. A-0794G01

Under Industry Canada regulations, this radio transmitter may only operate using an antenna of a type and maximum (or lesser) gain approved for the transmitter by Industry Canada.

To reduce potential radio interference to other users, the antenna type and its gain should be so chosen that the Equivalent Isotropically Radiated Power (EIRP) is not more than that necessary for successful communication.