FOREWORD

This handbook contains information on the Triumph Thunderbird motorcycle. Always store this owner's handbook with the motorcycle and refer to it for information whenever necessary.

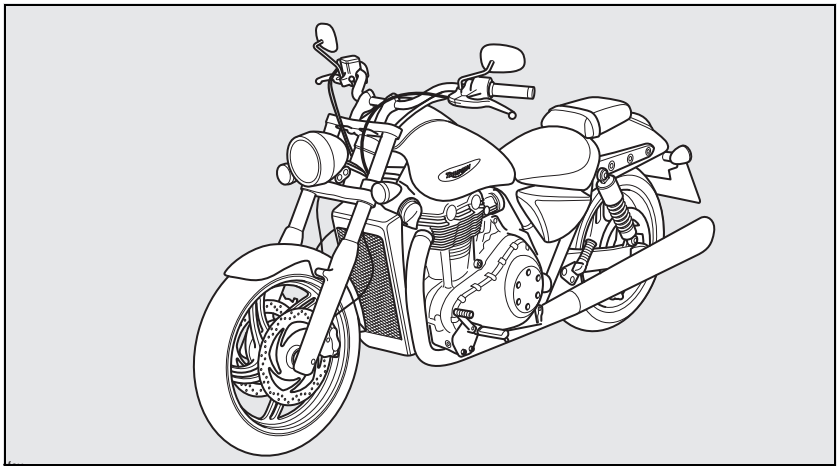

Warnings, Cautions and Notes

Throughout this owner's handbook particularly important information is presented in the following form:

Warning

This warning symbol identifies special instructions or procedures, which if not correctly followed could result in personal injury, or loss of life.

Caution

This caution symbol identifies special instructions or procedures, which, if not strictly observed, could result in damage to, or destruction of, equipment.

Note:

- **This note symbol indicates points of particular interest for more efficient and convenient operation.**

Foreword

Warning Labels

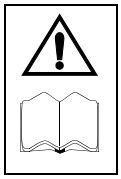

At certain areas of the motorcycle, the symbol (left) can be seen. The symbol means 'CAUTION: REFER TO THE HANDBOOK' and will be followed by a pictorial representation of the subject concerned.

Never attempt to ride the motorcycle or make any adjustments without reference to the relevant instructions contained in this handbook.

See pages *12* and *13* for the location of all labels bearing this symbol. Where necessary, this symbol will also appear on the pages containing the relevant information.

Maintenance

To ensure a long, safe and trouble free life for your motorcycle, maintenance should only be carried out by an authorized Triumph dealer.

Only an authorized Triumph dealer will have the necessary knowledge, equipment and skills to maintain your Triumph motorcycle correctly.

To locate your nearest Triumph dealer, visit the Triumph web-site at www.triumph.co.uk or telephone Triumph Motorcycles America Limited on (678) 854 2010. Their address is given in the service record book that accompanies this handbook.

Noise Control System

Tampering With the Noise Control System is Prohibited.

Owners are warned that the law may prohibit:

a) The removal or rendering inoperative by any person other than for purposes of maintenance, repair or replacement, of any device or element of design incorporated into any new vehicle for the purpose of noise control prior to its sale or delivery to the ultimate purchaser or while it is in use and,

b) the use of the vehicle after such device or element of design has been removed or rendered inoperative by any person.

Owner's Handbook

Thank you for choosing a Triumph motorcycle. This motorcycle is the product of Triumph's use of proven engineering, exhaustive testing, and continuous striving for superior reliability, safety and performance.

Please read this owner's handbook before riding in order to become thoroughly familiar with the correct operation of your motorcycle's controls, its features, capabilities and limitations.

This handbook includes safe riding tips, but does not contain all the techniques and skills necessary to ride a motorcycle safely.

Triumph strongly recommends that all riders undertake a safety course approved by the Motorcycle Safety Foundation to ensure safe operation of this motorcycle. Information about the nearest Motorcycle Safety Foundation course to you can be obtained by calling the following nationwide toll free number: 800-447-4700, or by writing to the Motorcycle Safety Foundation at: 2, Jenner Street, Irvine, California 92718. To ensure a long and trouble free life for your motorcycle, maintenance should be carried out as described in this manual by an authorized Triumph dealer.

This handbook is also available from your local dealer in:

- Dutch;
- French;
- German;
- Italian;
- Japanese;
- Portuguese;
- Spanish;
- Swedish.

Foreword

Note:

- **The fitting of some accessory kits requires removal of the original pillion seat, which houses the handbook. In these circumstances, ensure the Owner's Handbook is removed from the pillion seat and carried with the motorcycle at all times.**

Warning

This owner's handbook, and all other instructions that are supplied with your motorcycle, should be considered a permanent part of your motorcycle and should remain with it even if your motorcycle is subsequently sold.

All riders must read this owner's handbook and all other instructions which are supplied with your motorcycle, before riding, in order to become thoroughly familiar with the correct operation of your motorcycle's controls, its features, capabilities and limitations. Do not lend your motorcycle to others as riding when not familiar with your motorcycle's controls, features, capabilities and limitations can lead to an accident.

Information

The information contained in this publication is based on the latest information available at the time of printing. Triumph reserves the right to make changes at any time without prior notice, or obligation.

Not to be reproduced wholly or in part without the written permission of Triumph Motorcycles America Limited.

© Copyright 01.2015 Triumph Motorcycles America Limited.

Publication part number 3854149-US issue 1.

Table of Contents

This handbook contains a number of different sections. The table of contents below will help you find the beginning of each section where, in the case of the major sections, a further table of contents will help you find the specific subject required.

Foreword 1
Warning Labels 12
Parts Identification 14
Serial Numbers 17
General Information 19
How to Ride the Motorcycle 41
Accessories, Loading and Passengers 53
Maintenance and Adjustment 57
Storage 103
Specifications 105

FOREWORD - SAFETY FIRST

The Motorcycle

Warning

This motorcycle is designed for on-road use only. It is not suitable for off-road use.

Off-road operation could lead to loss of control of the motorcycle resulting in an accident causing injury or loss of life.

Warning

This motorcycle is not designed to tow a trailer or be fitted with a sidecar. Fitting a sidecar and/or a trailer may result in loss of control and an accident.

Warning

This motorcycle is designed for use as a two-wheeled vehicle capable of carrying a rider on his/her own, or a rider and one passenger (subject to a passenger seat being installed).

The total weight of the rider, and any passenger, accessories and luggage must not exceed the maximum load limit of 509 lb (231 kg).

Fuel and Exhaust Fumes

Warning

GASOLINE IS HIGHLY FLAMMABLE:

Always turn off the engine when refuelling.

Do not refuel or open the fuel filler cap while smoking or in the vicinity of any open (naked) flame.

Take care not to spill any gasoline on the engine, exhaust pipes or mufflers when refuelling.

If gasoline is swallowed, inhaled or allowed to get into the eyes, seek immediate medical attention.

Spillage on the skin should be immediately washed off with soap and water and clothing contaminated with gasoline should immediately be removed.

Burns and other serious skin conditions may result from contact with gasoline.

Warning

Never start your engine or let it run for any length of time in a closed area. The exhaust fumes are poisonous and may cause loss of consciousness and death within a short time. Always operate your motorcycle in the open-air or in an area with adequate ventilation.

Helmet and Clothing

Warning

When riding the motorcycle, both rider and passenger must always wear a motorcycle helmet, eye protection, gloves, boots, trousers (close fitting around the knee and ankle) and a brightly coloured jacket. Brightly coloured clothing will considerably increase a rider's (or passenger's) visibility to other operators of road vehicles. Although full protection is not possible, wearing correct protective clothing can reduce the risk of injury when riding.

Warning

A helmet is one of the most important pieces of riding gear as it offers protection against head injuries. You and your passenger's helmet should be carefully chosen and should fit you or your passenger's head comfortably and securely. A brightly colored helmet will increase a rider's (or passenger's) visibility to other operators of road vehicles.

An open face helmet offers some protection in an accident though a full face helmet will offer more.

Always wear a visor or approved goggles to help vision and to protect your eyes.

cbma

When choosing a helmet, always look for a DOT (Department of Transport) sticker indicating that the helmet has DOT approval. Do not buy a helmet without DOT approval.

Parking

Warning

Always turn off the engine and remove the ignition key before leaving the motorcycle unattended. By removing the key, the risk of use of the motorcycle by unauthorized or untrained persons is reduced.

When parking the motorcycle, always remember the following:

Engage first gear to help prevent the motorcycle from rolling off the stand.

The engine and exhaust system will be hot after riding. DO NOT park where pedestrians, animals and/or children are likely to touch the motorcycle.

Do not park on soft ground or on a steeply inclined surface. Parking under these conditions may cause the motorcycle to fall over.

For further details, please refer to the 'How to Ride the Motorcycle' section of this owner's handbook.

Parts and Accessories

Warning

Owners should be aware that the only approved parts, accessories and conversions for any Triumph motorcycle are those which carry official Triumph approval and are installed to the motorcycle by an authorized dealer.

In particular, it is extremely hazardous to install or replace parts or accessories whose fitting requires the dismantling of, or addition to, either the electrical or fuel systems and any such modification could cause a safety hazard.

The fitting of any non-approved parts, accessories or conversions may adversely affect the handling, stability or other aspect of the motorcycle operation that may result in an accident causing injury or death.

Triumph does not accept any liability whatsoever for defects caused by the fitting of non-approved parts, accessories or conversions or the fitting of any approved parts, accessories or conversions by non-approved personnel.

Maintenance/Equipment

Warning

Consult your authorized Triumph dealer whenever there is doubt as to the correct or safe operation of this Triumph motorcycle.

Remember that continued operation of an incorrectly performing motorcycle may aggravate a fault and may also compromise safety.

Warning

Use of a motorcycle with bank angle indicators worn beyond the maximum limit (when the bank angle indicator is worn to a minimum of 0.19 in (5 mm) in length) will allow the motorcycle to be banked to an unsafe angle. Therefore, always replace the bank angle indicator pegs when they are worn to 0.19 in (5 mm) in length. Banking to an unsafe angle may cause instability, loss of motorcycle control and an accident.

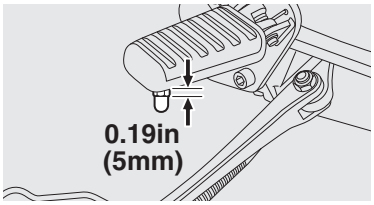

Warning

Ensure all equipment that is required by law is installed and functioning correctly. The removal or alteration of the motorcycle's lights, silencers, emission or noise control systems can violate the law. Incorrect or improper modification may adversely affect the handling, stability or other aspect of the motorcycle operation, which may result in an accident causing injury or death.

Warning

If the motorcycle is involved in an accident, collision or fall, it must be taken to an authorized Triumph dealer for inspection and repair. Any accident can cause damage to the motorcycle that, if not correctly repaired, may cause a second accident that may result in injury or death.

Riding

Warning

Never ride the motorcycle when fatigued or under the influence of alcohol or other drugs.

Riding when under the influence of alcohol or other drugs is illegal.

Riding when fatigued or under the influence of alcohol or other drugs reduces the rider's ability to maintain control of the motorcycle and may lead to loss of control and an accident.

Warning

All riders must be licensed to operate the motorcycle. Operation of the motorcycle without a license is illegal and could lead to prosecution.

Operation of the motorcycle without formal training in the correct riding techniques that are necessary to become licenced is dangerous and may lead to loss of motorcycle control and an accident.

Warning

Always ride defensively and wear the protective equipment mentioned elsewhere in this foreword. Remember, in an accident, a motorcycle does not give the same impact protection as a car.

Warning

This Triumph motorcycle should be operated within the legal speed limits for the particular road travelled. Operating a motorcycle at high speeds can be potentially dangerous since the time available to react to given traffic situations is greatly reduced as road speed increases. Always reduce speed in potentially hazardous driving conditions such as bad weather or heavy traffic.

Warning

Continually observe and react to changes in road surface, traffic and wind conditions. All two-wheeled vehicles are subject to external forces which may cause an accident. These forces include but are not limited to:

- Wind draft from passing vehicles;
- Potholes, uneven or damaged road surfaces;
- Bad weather;
- Rider error.

Always operate the motorcycle at moderate speed and away from heavy traffic until you have become thoroughly familiar with its handling and operating characteristics. Never exceed the legal speed limit.

Warning

Ensure that you know and respect the rules of the road. Read and observe publications such as 'MOTORCYCLE SAFETY', 'YOU AND YOUR MOTORCYCLE, RIDING TIPS' and also read and become familiar with the contents of the MOTORCYCLE HANDBOOK for your state.

Caution

This Triumph motorcycle is not fitted with spark arresters. Operation in forests, brush or grass areas may violate state and local laws and regulations.

WOBBLE/WEAVE

A weave is a relatively slow oscillation of the rear of the motorcycle, while a wobble is a rapid, possibly strong shaking of the handlebar. These are related but distinct stability problems usually caused by excessive weight in the wrong place, or by a mechanical problem such as worn or loose bearings or under-inflated or unevenly worn tires.

Your solution to both situations is the same. Keep a firm hold on the handlebars without locking arms or fighting the steering. Smoothly ease off the throttle to slow gradually. Do not apply the brakes, and do not accelerate to try to stop the wobble or weave. In some cases, it helps to shift your body weight forward by leaning over the tank.

Copyright © 2005 Motorcycle Safety Foundation. All rights reserved. Used with permission.

Handlebars and Footrests

Warning

The rider must maintain control of the vehicle by keeping hands on the handlebars at all times.

The handling and stability of a motorcycle will be adversely affected if the rider removes his hands from the handlebars, resulting in loss of motorcycle control and an accident.

Warning

The rider and passenger must always use the footrests provided, during operation of the vehicle.

By using the footrests, both rider and passenger will reduce the risk of inadvertent contact with any motorcycle components and will also reduce the risk of injury from entrapment of clothing.

WARNING LABELS

Warning Label Locations – Thunderbird

The labels detailed on this and the following pages draw your attention to important safety information in this handbook. Before riding, ensure that all riders have understood and complied with all the information to which these labels relate.

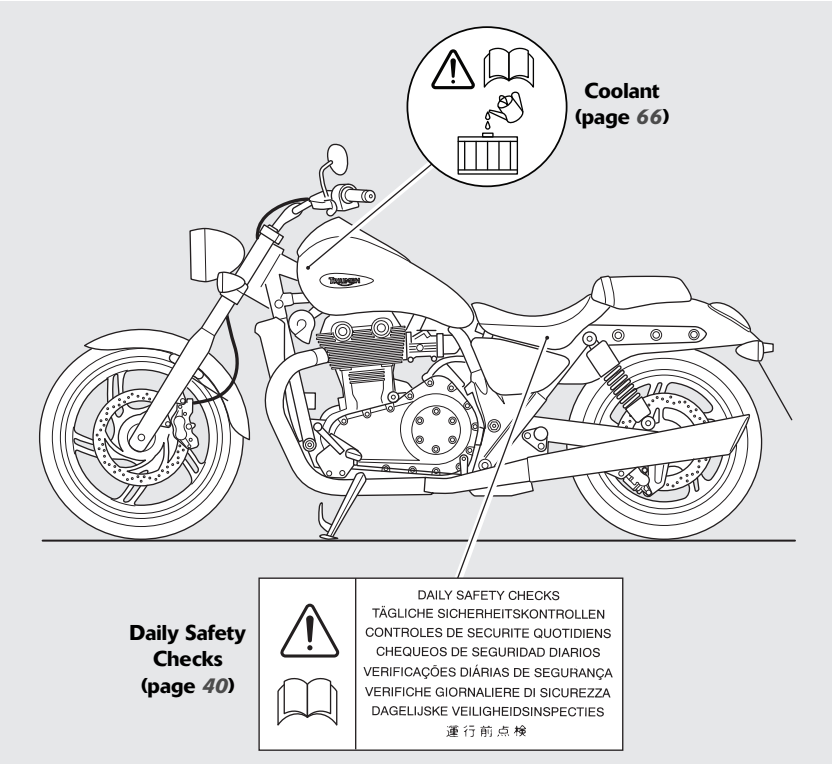

Warning Label Locations – Thunderbird (continued)

Caution

All warning labels and decals, with the exception of the Running-in label, are fitted to the motorcycle using a strong adhesive. In some cases, labels are installed prior to an application of paint lacquer. Therefore, any attempt to remove the warning labels will cause damage to the paintwork or bodywork.

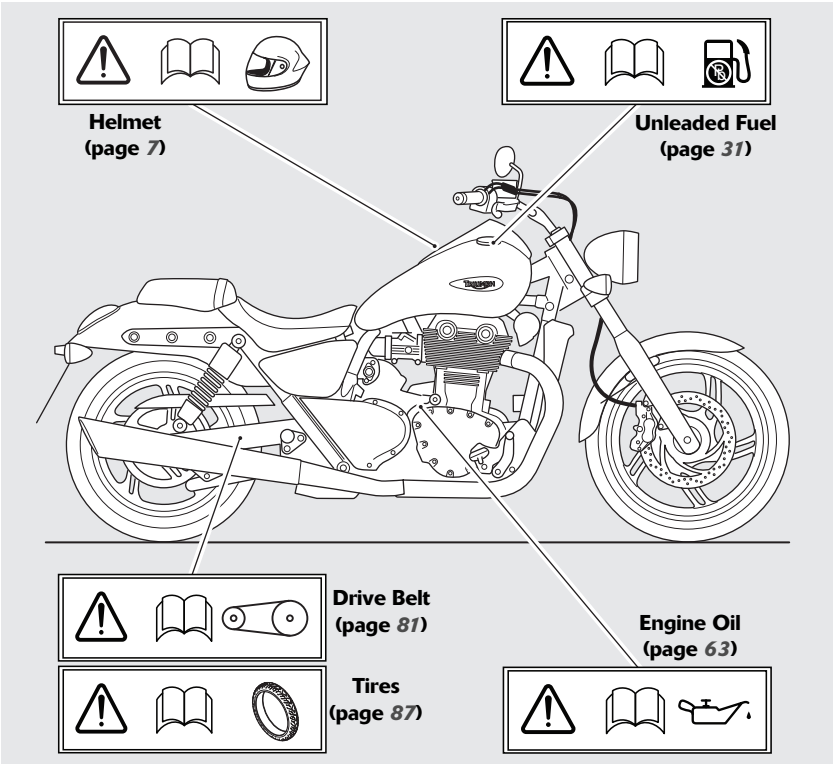

PARTS IDENTIFICATION

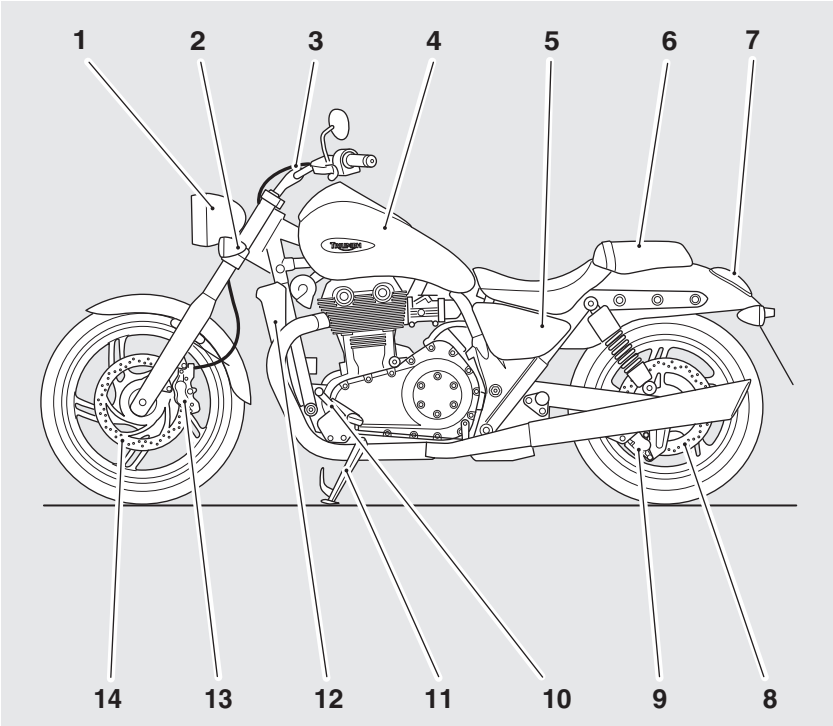

1. Headlight
2. Front turn signal
3. Clutch cable
4. Fuel tank
5. Allen Key (behind side panel)
6. Handbook/C-spanner (beneath pillion seat)
7. Brake/Rear light
8. Rear brake disc
9. Rear brake caliper
10. Gear shift pedal
11. Side stand
12. Radiator
13. Front brake caliper
14. Front brake disc

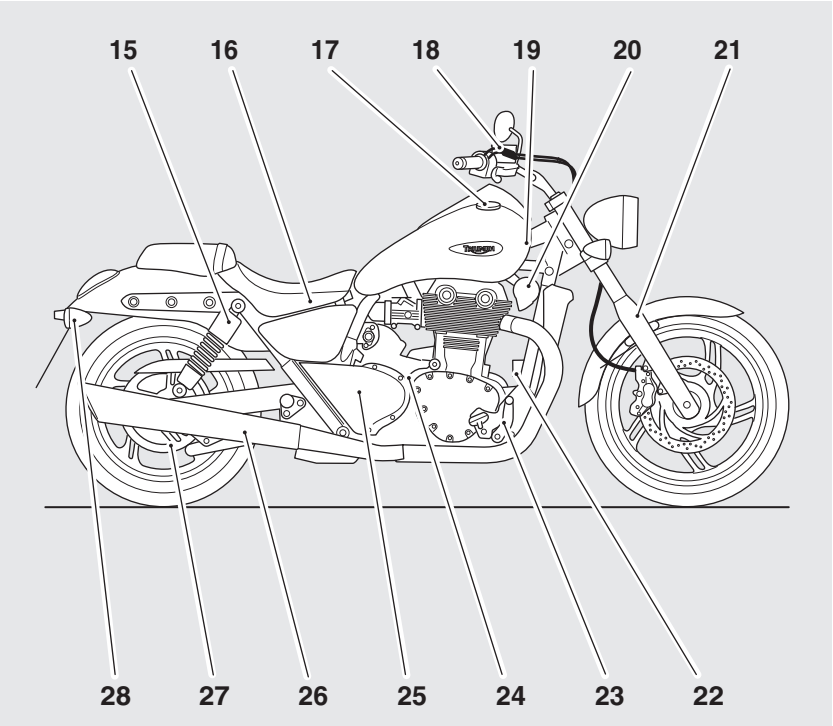

15. Rear suspension unit
16. Battery (beneath seat)
17. Fuel filler cap
18. Front brake fluid reservoir
19. Coolant pressure cap (beneath fuel tank)
20. Horn
21. Front fork
22. Rear brake fluid reservoir
23. Rear brake pedal
24. Oil filler cap/Dipstick
25. Coolant expansion tank (behind drive belt pulley cover)
26. Muffler
27. Drive belt pulley
28. Rear turn signal

Parts Identification

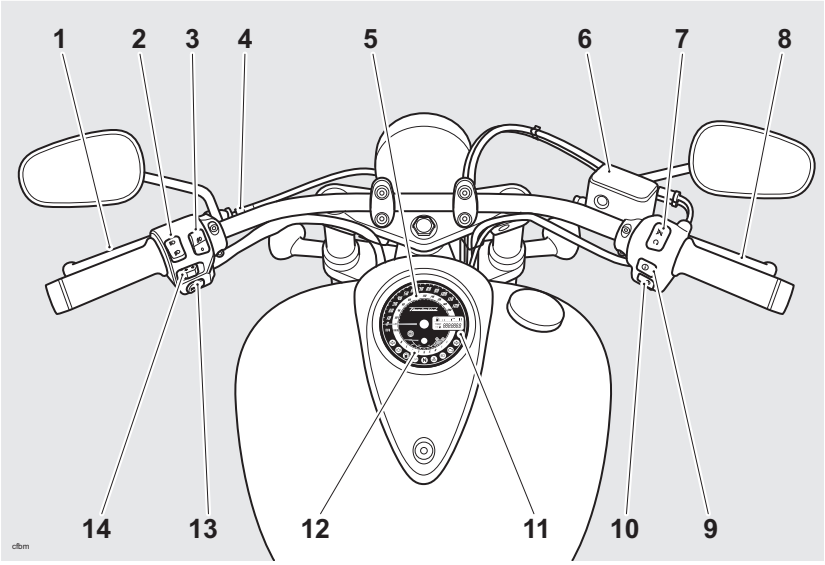

1. Clutch lever
2. Headlight dimmer switch
3. Fog lamp switch (fog lights are an accessory)
4. Clutch lever adjuster
5. Speedometer
6. Front brake fluid reservoir
7. Engine stop switch
8. Front brake lever
9. Scroll button
10. Starter button
11. Odometer
12. Tachometer
13. Horn button
14. Turn signal switch

SERIAL NUMBERS

Vehicle Identification Number (VIN)

The vehicle identification number is stamped into the steering head area of the frame. It is also displayed on a plate, riveted to the frame, beneath the rider's seat.

In addition, it is displayed on a label which is also adjacent to the steering head.

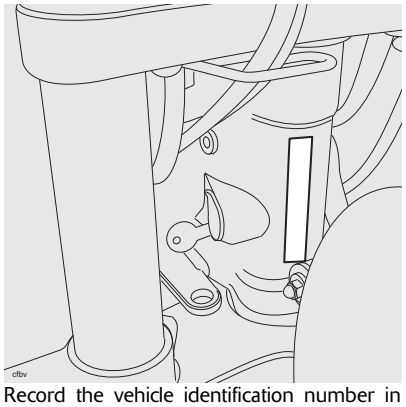

Record the vehicle identification number in the space provided below.

Engine Serial Number

The engine serial number is stamped on the upper engine crankcase, towards the rear, and is visible from left hand side, behind the starter motor.

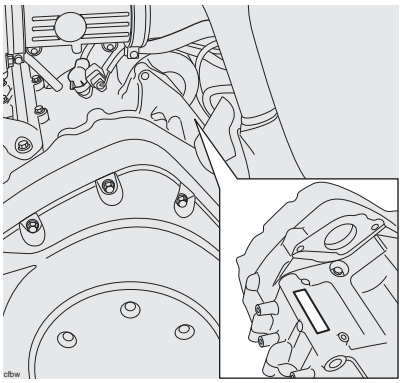

Record the engine serial number in the space provided below.

This page intentionally left blank

GENERAL INFORMATION

Table of Contents

Instrument Panel Layout 21
Instruments 22
Speedometer 22
Tachometer 22
Odometer/Trip Meter/Clock 22
Fuel Gauge 23
Warning Lights 24
Low Oil Pressure Warning 24
Coolant Temperature 24
Engine Management System Malfunction Indicator Light 24
Turn Signal Indicators 25
High Beam 25
Neutral 25
Low Fuel 25
Alarm 25
ABS (Anti-lock Brake System) Indicator Light 25
Ignition Key 26
Ignition Switch 26
Switch Location 26
Switch Operation 27
Ignition Switch Positions 27
Steering Lock Key 28
Steering Lock 28
Right Handlebar Switches 29
Engine Stop Switch 29
Starter Button 30
Scroll Button 30
Left Handlebar Switches 30
Headlight Dimmer Switch 30
Turn Signal Switch 31
Horn Button 31

Fog Light Switch 31
Fuel Requirement/Refuelling 31
Fuel Grade 31
Fuel Tank Cap 33
Filling the Fuel Tank 34
Side Stand 35
Side Panels 35
Tool Kit and Handbook 36
Seats 37
Seat Care 37
Rider Seat Removal 37
Pillion Seat Removal 38
Breaking-In 39
Safe Operation 40
Daily Safety Checks 40

Instrument Panel Layout

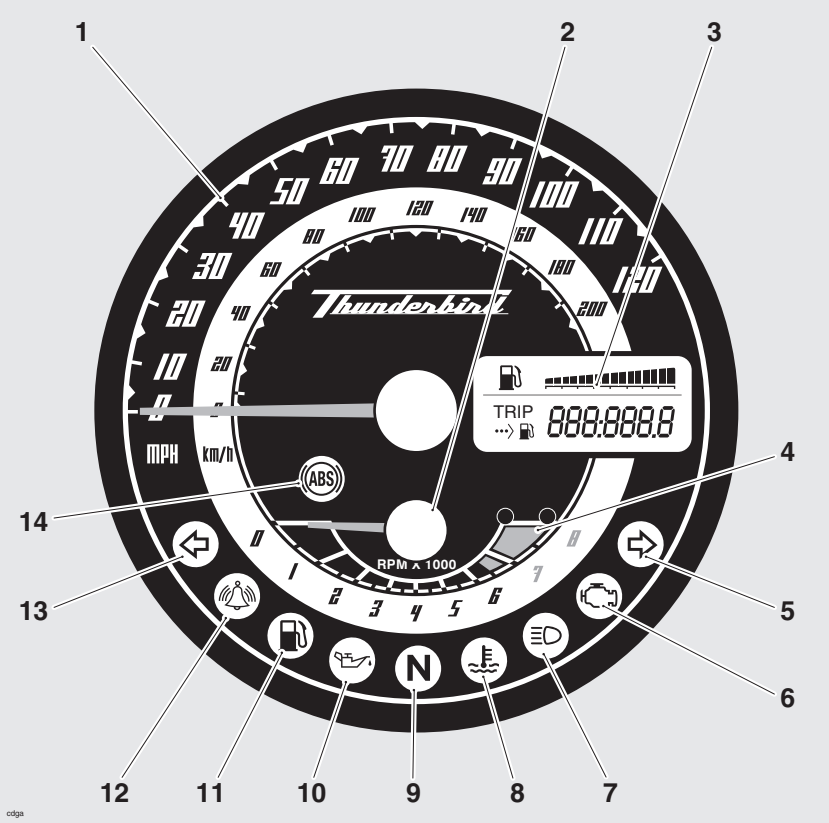

1. Speedometer
2. Tachometer
3. Odometer/Trip meter/Clock
4. Tachometer 'red zone'
5. Right hand turn signal light
6. Engine management malfunction indicator light
7. High beam indicator light
8. High coolant temperature warning light
9. Neutral indicator light
10. Low oil pressure warning light
11. Low fuel level indicator light
12. Alarm status indicator light (alarm is an accessory)
13. Left hand turn signal light
14. ABS warning light (ABS models only)

Instruments

Speedometer

The speedometer indicates the road speed of the motorcycle.

Tachometer

The tachometer shows the engine speed in revolutions per minute - rpm (r/min). On the right side of the tachometer face is the 'red zone'. Engine rpm (r/min) in the red zone is above the maximum recommended engine speed and is also above the range for best performance.

Caution

Never allow engine rpm to enter the 'red zone' as severe engine damage may result.

Odometer/Trip Meter/Clock

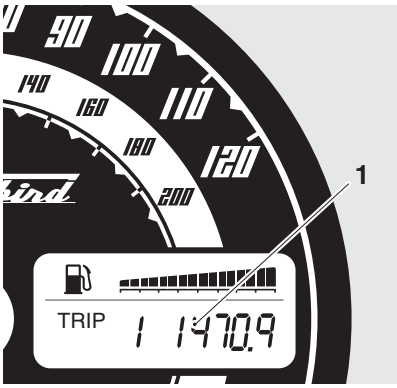

1. **Odometer/trip meter display**

The odometer shows the total distance that the motorcycle has travelled.

There are two trip meters. Either trip meter shows the distance that the motorcycle has travelled since the meter on display was last reset to zero.

Warning

Do not attempt to switch between odometer and trip meter display modes or reset the trip meter with the motorcycle in motion as this may lead to loss of motorcycle control and an accident.

To switch between the trip meter, clock and range to empty display modes, press and release the scroll button (see below), located on the right hand handlebar switch housing, until the desired display is visible.

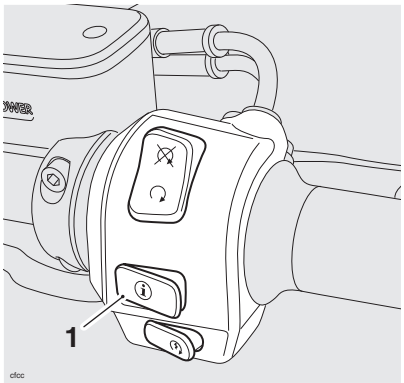

1. **Scroll button**

The display will scroll through in the order:

- Odometer;
- Trip meter 1;
- Trip meter 2;
- Clock;
- Range to empty.

Clock Adjustment

Warning

Do not attempt to adjust the clock with the motorcycle in motion as this may lead to loss of motorcycle control and an accident.

To reset the clock, select the clock display. Then press and hold the scroll button (see page *30*) for 4 seconds, the clock's hour display will start to flash; release the scroll button.

To reset the hour display, ensure the hour display is still flashing then press the scroll button to change the setting. Each individual button press will change the setting by one digit. If the button is held, the display will continuously scroll through in single digit increments.

When the correct hour display is shown, release the scroll button for 4 seconds. The minutes display will begin to flash. The minutes display is adjusted in the same way as for the hour display.

Once both hours and minutes are correctly set, release the scroll button for 4 seconds and the display will cease to flash.

Trip Meter Reset

To reset either of the trip meters, select and display the trip meter to be zeroed. Then press and hold the scroll button for 4 seconds. After 4 seconds, the trip meter on display will reset to zero.

Range to Empty

This is an indication of the predicted distance that can be travelled on the remaining fuel in the tank.

Fuel Gauge

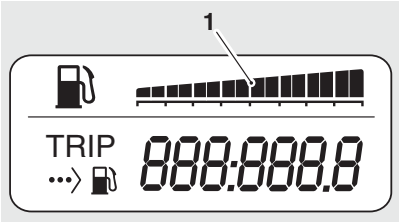

1. Fuel gauge

The fuel gauge indicates the amount of fuel in the tank.

With the ignition switched on, the number of bars shown in the display indicates the level of fuel in the tank.

When the fuel tank is full all 16 bars are displayed and when empty, no bars are displayed. Other gauge markings indicate intermediate fuel levels between full and empty.

When 3 bars are displayed the low fuel warning light will illuminate and the trip meter will switch to 'Range to Empty' display (see page *23*). This indicates there are approximately 1.2 US gal (4.5 liters) of fuel remaining in the tank and you should refuel at the earliest opportunity.

If the ignition is switched off and on again, without refuelling, the instrument will not automatically display the Range screen again, it will instead display the trip meter screen in use before the fuel level became low.

Note:

- **After refuelling, the fuel gauge and range to empty information will be updated only while riding the motorcycle. Depending on the riding style, updating could take up to five minutes.**

Warning Lights

Low Oil Pressure Warning

With the engine running, if the engine oil pressure becomes dangerously low, the low oil pressure warning light will illuminate.

Caution

Stop the engine immediately if the low oil pressure warning light illuminates. Do not restart the engine until the fault has been rectified.

Severe engine damage will result from running the engine when the low oil pressure warning light is illuminated.

Note:

- **The low oil pressure warning light will illuminate if the ignition is switched on without running the engine.**

Coolant Temperature

If the coolant temperature becomes too high, the high coolant temperature warning light will illuminate.

Caution

Do not continue to run the engine if the high coolant temperature warning light is illuminated as severe engine damage may result.

Engine Management System Malfunction Indicator Light

The malfunction indicator light for the engine management system illuminates when the ignition is switched on (to indicate that it is working) but should not become illuminated when the engine is running.

If the malfunction indicator light becomes illuminated when the engine is running, this indicates that a fault has occurred in one or more of the systems controlled by the engine management system. In such circumstances, the engine management system will switch to 'limp-home' mode so that the journey may be completed, if the fault is not so severe that the engine will not run.

Warning

Reduce speed and do not continue to ride for longer than is necessary with the malfunction indicator light illuminated. The fault may adversely affect engine performance, exhaust emissions and fuel consumption. Reduced engine performance could cause a dangerous riding condition, leading to loss of control and an accident. Contact an authorized Triumph dealer as soon as possible to have the fault checked and rectified.

Note:

- **If the malfunction indicator light flashes when the ignition is switched on contact an authorized Triumph dealer as soon as possible to have the situation rectified. In these circumstances the engine will not start.**

Turn Signal Indicators

When the turn signal switch is turned to left or right, the corresponding turn signal warning light will flash on and off at the same speed as the turn indicators.

High Beam

When the ignition is switched on and the headlight dimmer switch is set to 'high beam', the high beam warning light will illuminate.

Neutral

The neutral warning light indicates when the transmission is in neutral (no gear selected). The warning light will illuminate when the transmission is in neutral with the ignition switch in the ON position.

Low Fuel

The low fuel indicator will illuminate when there are approximately 1.2 US gal (4.5 liters) of fuel remaining in the tank.

Alarm

The alarm light will illuminate when the conditions described in the accessory alarm instructions are met.

ABS (Anti-lock Brake System) Indicator Light

The ABS indicator light illuminates to show that the ABS function is not available. Illumination is normal after engine start-up, and until the motorcycle first reaches a speed exceeding 6 mph (10km/h). Unless there is a fault, it should not illuminate again until the engine is restarted.

If the indicator light becomes illuminated at any other time while riding it indicates that the ABS has a malfunction that requires investigation.

Warning

If the ABS is not functioning, the brake system will continue to function as a non-ABS braking system. Do not continue to ride for longer than is necessary with the indicator light illuminated. Contact an authorized Triumph dealer as soon as possible to have the fault checked and rectified. In this situation braking too hard will cause the wheels to lock resulting in loss of control and an accident.

Ignition Key

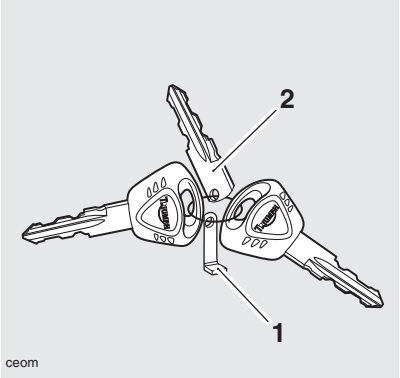

1. **Key number tag**
2. **Spare key blade**

The ignition key operates the ignition switch only. A different key operates the steering lock.

When the motorcycle is delivered from the factory, two ignition keys are supplied together with a small tag bearing the key number, and a spare key blade for use with Triumph accessory alarm. Make a note of the key number and store the spare key, key blade and key number tag in a safe place away from the motorcycle.

Your authorized Triumph dealer can supply a replacement key cut from details of the key number or can cut a new key using the original as a master.

Caution

Do not store the spare key or key blade with the motorcycle as this will reduce all aspects of security.

Ignition Switch

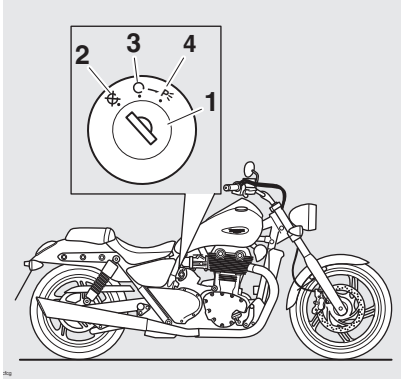

1. **Ignition Switch lock**
2. **OFF position**
3. **ON position**
4. **PARK position**

Switch Location

The ignition switch is located in line with the rear edge of the fuel tank, on the right hand side of the motorcycle.

Switch Operation

This is a three position, key operated switch. The key can be removed from the switch only when it is in the OFF or P (PARK) positions.

To turn the switch from OFF to ON, insert the key and turn the key clockwise to the ON position.

To turn the switch from ON to PARK, push the key barrel further into the lock and turn clockwise to the PARK position. Use the PARK position only when temporarily leaving the motorcycle in a situation where the position lights must remain on.

To turn the key back to OFF, turn the key counter-clockwise.

Ignition Switch Positions

	Engine off. All electrical circuits off.
	Engine on. All electrical equipment can be used.
P	Engine off. Tail, side and license plate lights on, all other electrical circuits cut off.

Warning

For reasons of security and safety, always turn the ignition to the OFF or PARK position and remove the key when leaving the motorcycle unattended.

Any unauthorized use of the motorcycle may cause injury to the user, other road users and pedestrians and may also cause damage to the motorcycle.

Note:

- **Do not leave the ignition switch in the P position for long periods as this will cause the battery to discharge.**

Caution

Additional keys or key rings attached to the ignition key may cause damage to the motorcycle's painted or polished components. Remove any such item from the ignition key to prevent damage to painted or polished components when the motorcycle is ridden.

Steering Lock Key

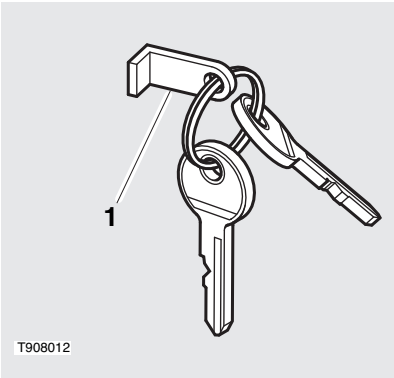

1. Steering lock key tag

The steering lock key operates the steering lock only. A different key operates the ignition switch.

When the motorcycle is delivered from the factory, two steering lock keys are supplied together with a small tag bearing the key number. Make a note of the key number and store the spare key and key number tag in a safe place away from the motorcycle.

Your authorized Triumph dealer can supply a replacement key cut from details of the key number or can cut a new key using the original as a master.

Caution

Do not store the spare key with the motorcycle as this will reduce all aspects of security.

Steering Lock

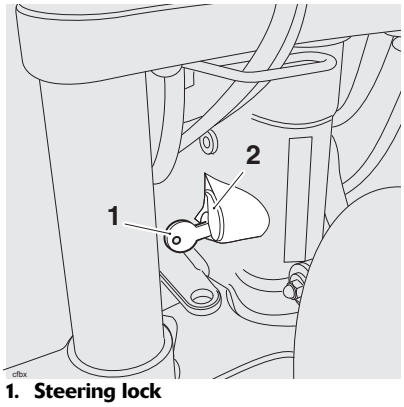

1. Steering lock
2. Steering lock cover

This is a two position, key operated lock. The key can be removed in either the engaged or disengaged positions.

To engage the lock, insert the key and push the complete lock inwards while turning anti-clockwise. At the same time turn the handlebars fully left until the lock engages (at which point the lock will turn and move inwards).

To disengage the steering lock, insert the key, turn the handlebars slightly to relieve any weight on the lock and turn the key further counter-clockwise until the lock springs outwards. Remove the key.

Warning

Always disengage the steering lock before riding as, with the steering lock engaged, it will not be possible to turn the handlebars or steer the motorcycle.

Riding without motorcycle steering control will lead to loss of control and an accident.

Right Handlebar Switches

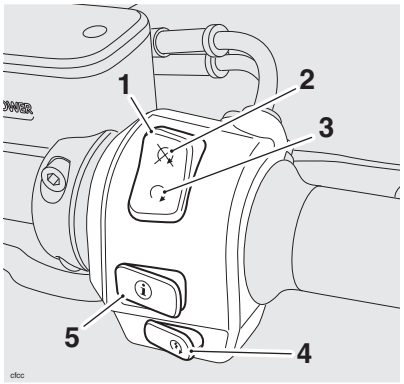

1. **Engine stop switch**
2. **RUN position**
3. **STOP position**
4. **Starter button**
5. **Scroll button**

Engine Stop Switch

In addition to the ignition switch being turned to the ON position, the engine stop switch must be in the RUN position for the motorcycle to operate.

The engine stop switch is for emergency use. If an emergency arises which requires the engine to be stopped, move the engine stop switch to the STOP position.

Note:

- **Although the engine stop switch stops the engine, it does not turn off all the electrical circuits and may cause difficulty in restarting the engine due to a discharged battery. Ordinarily, only the ignition switch should be used to stop the engine.**

Caution

Do not leave the ignition switch in the ON position unless the engine is running as this may cause damage to electrical components and will discharge the battery.

Starter Button

The starter button operates the electric starter. For the starter to operate, the clutch lever must be pulled to the handlebar.

Note:

- **Even if the clutch lever is pulled to the handlebar, the starter will not operate if the side stand is down and a gear is engaged.**

Scroll Button

The scroll button is used to operate the following functions of the instruments:

- odometer functions (see page *22*);
- trip reset (see page *23*);
- clock reset (see page *23*).

Left Handlebar Switches

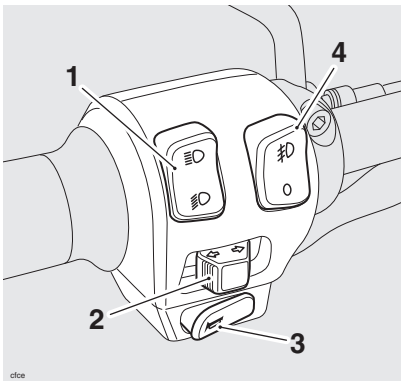

1. **Headlight dimmer switch**
2. **Turn signal switch**
3. **Horn button**
4. **Fog light switch (fog lights are an accessory)**

Headlight Dimmer Switch

High or low beam can be selected with the headlight dimmer switch. To select high beam, push the switch forward. To select low beam, push the switch rearwards. When the high beam is turned on, the high beam indicator light will illuminate.

Note:

- **A lighting on/off switch is not fitted to this model. The headlight, rear light and license plate light all function automatically when the ignition is turned to the ON position.**

Turn Signal Switch

Note:

- **This motorcycle is equipped with an turn signal self cancel system. The system becomes active eight seconds after operating a turn signal.**

When the turn signal switch is pushed to the left or right and released, the corresponding turn signals will flash on and off.

The turn signal self cancel system becomes active eight seconds after operating a turn signal. Eight seconds after turning the turn signal on and when the motorcycle has travelled a further 213 feet (65 meters), the turn signal self cancel system will automatically turn off the turn signals. The turn signals can be cancelled manually. To manually turn off the turn signals, press and release the turn signal switch in the central position.

Horn Button

When the horn button is pushed, with the ignition switch turned to the ON position, the horn will sound.

Fog Light Switch

The fog light switch is provided for the installation of auxiliary or fog lights, which are available from your Triumph dealer as an accessory.

Fuel Requirement/Refuelling

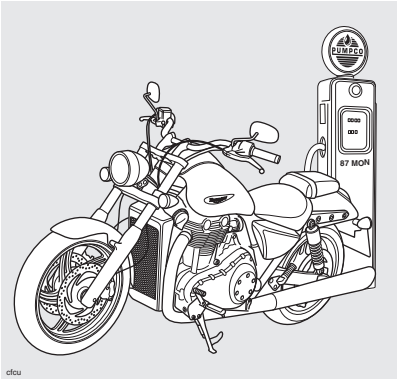

Fuel Grade

This Triumph motorcycle is designed to run on unleaded gasoline with a CLC or AKI octane rating (R+M)/2 of 87 or higher. Federal regulations require that pumps delivering unleaded gasoline are marked 'UNLEADED' and that the Cost of Living Council (CLC) or Anti-Knock Index (AKI) octane rating is also displayed. These ratings are an average of the Research Octane Number (RON) and the Motor Octane Number (MON).

Caution

The exhaust system for this model is fitted with a catalytic converter to help reduce exhaust emission levels. The catalytic converter can be permanently damaged if the motorcycle is allowed to run out of fuel or if the fuel level is allowed to get very low. Always ensure you have adequate fuel for your journey.

Caution

The use of leaded gasoline is illegal in some countries, states or territories. Check local regulations before using leaded gasoline.

Note:

- **If 'knocking' or 'pinging' occurs at a steady engine speed under normal load, use a different brand of gasoline or gasoline which has a higher octane rating.**

Oxygenated Gasoline

To help in meeting clean air standards, some areas of the U.S. use oxygenated gasoline to help reduce harmful emissions. These gasolines are a blend of conventional gasoline and another compound such as alcohol. This Triumph motorcycle will give its best performance when using unleaded gasoline. However, the following should be used as a guide if you use any oxygenated fuels.

Ethanol

Ethanol fuel is a mixture of 10% Ethanol and 90% gasoline and is often described under the names 'gasohol', 'Ethanol enhanced', or 'contains Ethanol'. This fuel may be used in your Triumph motorcycle.

MTBE (Methyl Tertiary Butyl Ether)

The use of gasolines containing up to 15% MTBE (Methyl Tertiary Butyl Ether) is permitted in this Triumph motorcycle.

Methanol

Caution

Fuels containing methanol should not be used as damage to components in the fuel system can be caused by contact with methanol.

Caution

Because of the generally higher volatility of oxygenated fuels, starting, engine response and fuel consumption may be adversely affected by their use. Should any of these difficulties be experienced, run the motorcycle on normal unleaded gasoline.

Warning

To help reduce hazards associated with refuelling, always observe the following fuel safety instructions:

Gasoline (fuel) is highly flammable and can be explosive under certain conditions. When refuelling, turn the ignition switch to the 'OFF' position.

Do not smoke.

Do not use a mobile telephone.

Make sure the refuelling area is well ventilated and free from any source of flame or sparks. This includes any appliance with a pilot light.

Never fill the tank until the fuel level rises into the filler neck. Heat from sunlight or other sources may cause the fuel to expand and overflow creating a fire hazard.

After refuelling always check that the fuel filler cap is correctly closed and locked.

Because gasoline (fuel) is highly flammable, any fuel leak or spillage, or any failure to observe the safety advice given above will lead to a fire hazard, which could cause damage to property, injury to persons or death.

Fuel Tank Cap

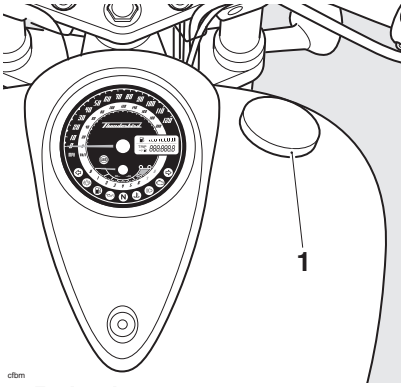

1. Fuel tank cap

To open the fuel tank cap, rotate the cap anti-clockwise and lift clear of the tank filler neck.

To close the cap, align the cap to the tank filler neck and rotate the cap clockwise until the cap seals against the filler neck. In the fully closed position, a ratchet mechanism prevents over-tightening of the cap by allowing the outer part of the cap to turn independently of the internal part.

Filling the Fuel Tank

Avoid filling the tank in rainy or dusty conditions where airborne material can contaminate the fuel.

Caution

Contaminated fuel may cause damage to fuel system components.

Fill the fuel tank slowly to help prevent spillage. Do not fill the tank to a level above the bottom of the filler neck. This will ensure there is enough air space to allow for fuel expansion if the fuel inside the tank expands through absorption of heat from the engine or from direct sunlight.

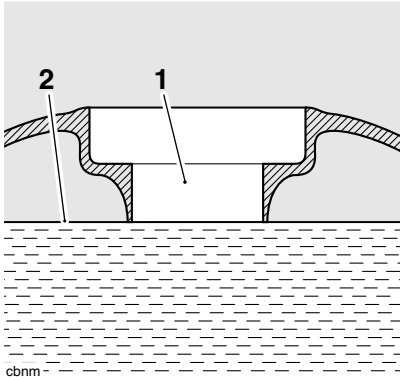

1. **Fuel filler neck**
2. **Maximum fuel level**

After refuelling always check that the fuel filler cap is correctly closed.

Warning

Overfilling the tank can lead to fuel spillage.

If fuel is spilled, thoroughly clean up the spillage immediately and dispose of the materials used safely.

Take care not to spill any fuel on the engine, exhaust pipes, tires or any other part of the motorcycle.

Because fuel is highly flammable, any fuel leak or spillage, or any failure to observe the safety advice given above may lead to a fire hazard, which could cause damage to property and injury or death to persons.

Fuel spilled near to, or onto the tires will reduce the tire's ability to grip the road. This will result in a dangerous riding condition potentially causing loss of motorcycle control and an accident.

Side Stand

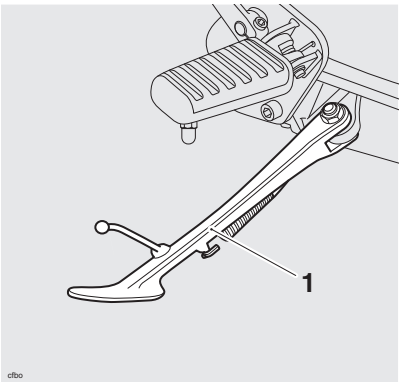

1. Side stand

The motorcycle is equipped with a side stand on which the motorcycle can be parked.

Warning

The motorcycle is fitted with an interlock system to prevent it from being ridden with the side stand in the down position.

Never attempt to ride with the side stand down or interfere with the interlock mechanism as this will cause a dangerous riding condition leading to loss of motorcycle control and an accident.

Note:

- **When using the side stand, always turn the handlebars fully to the left and leave the motorcycle in first gear.**

Whenever the side stand is used, before riding, always ensure that the stand is fully up after first sitting on the motorcycle.

For instructions on safe parking, refer to the 'How to Ride the Motorcycle' section.

Side Panels

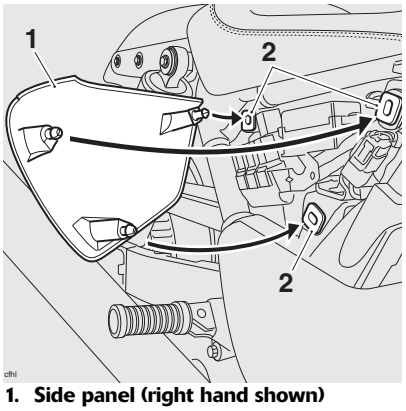

1. Side panel (right hand shown)
2. Grommets

Side panel removal is required to access the fusebox and the tool kit Allen key.

To remove either side panel, grasp the panel firmly in both hands pull the panel away from the motorcycle until it clears the three retaining grommets (leaving the grommets in place).

To refit, position the three locating dowels to the grommets, then press firmly to secure the panel.

Ensure the panel is correctly located over the upper and lower locating dowels.

Finally, grasp the panel and ensure that it is fully retained.

Tool Kit and Handbook

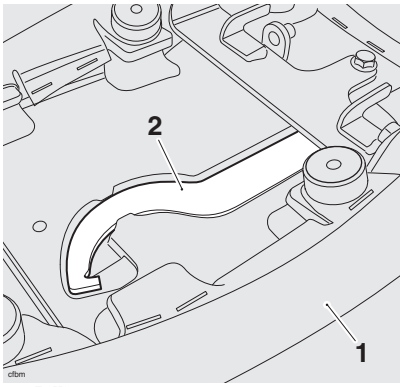

1. **Pillion seat**
2. **C-spanner**

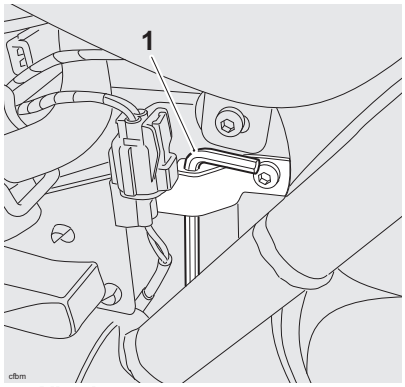

1. **Allen key**

The tool kit consists of an Allen key for removal of the rider and pillion seats and a C-spanner for adjustment of the rear suspension. The Allen key is located behind the left hand side panel (see page *35*), attached to a bracket. The C-spanner is stored under the pillion seat, behind the handbook.

To gain access to the handbook, remove the pillion seat (see page *38*). The handbook is located on the underside of the pillion seat.

Note:

- **The fitting of some accessory kits requires removal of the original pillion seat, which houses the handbook. In these circumstances, ensure the Owner's Handbook is removed from the pillion seat and carried with the motorcycle at all times.**

Seats

Seat Care

To prevent damage to the seats or seat covers, care must be taken not to drop or lean the seats against any surface which may damage the seats or seat covers.

Caution

To prevent damage to the seats or seat covers, care must be taken not to drop the seats. Do not lean the seats against the motorcycle or any surface which may damage the seats or seat covers. Instead, place the seats, with the seat cover facing upwards, on a clean, flat surface which is covered with a soft cloth.

Do not place any item on the seats which may cause damage or staining to the seat covers.

Rider Seat Removal

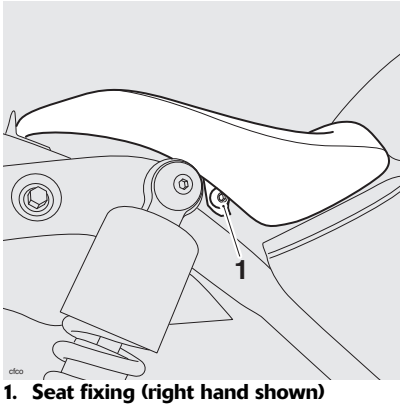

1. **Seat fixing (right hand shown)**

To remove the rider's seat, remove the two side fixings using the Allen key provided in the tool kit. Lift the seat up at the back for complete removal from the motorcycle.

To refit the seat, engage the seat's tongue under the fuel tank, install and tighten the side fixings to **80 lbf in (9 Nm)**.

Warning

To prevent detachment of the seat during riding, after fitting always grasp the seat and pull firmly upwards. If the seat is not correctly secured it may detach from the motorcycle. A loose or detached seat could cause loss of motorcycle control and an accident.

Pillion Seat Removal

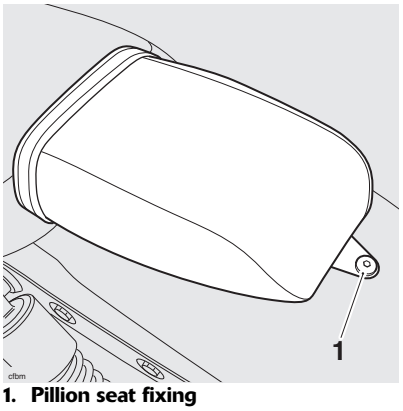

1. Pillion seat fixing

To remove the pillion seat, remove the rear fixing using the Allen key provided in the tool kit (see page *36*). Lift the seat up at the back for complete removal from the motorcycle.

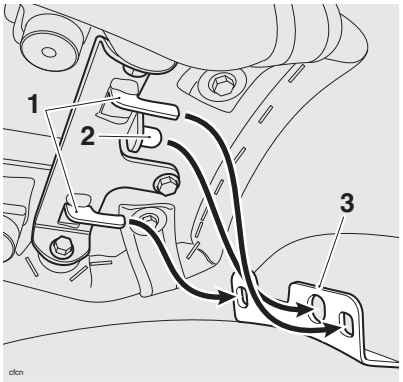

1. Pillion seat hooks
2. Location peg
3. Pillion seat bracket

To refit the seat, engage the seat's two hooks and location pin into the bracket behind the rider's seat. Install and tighten the rear fixing to **7 lbf ft (10 Nm)**.

Warning

To prevent detachment of the seat during riding, after fitting always grasp the seat and pull firmly upwards. If the seat is not correctly secured it may detach from the motorcycle. A loose or detached seat could cause loss of motorcycle control and an accident.

Breaking-In

Breaking-in is the name given to the process that occurs during the first hours of a new vehicle's operation.

In particular, internal friction in the engine will be higher when components are new. Later on, when continued operation of the engine has ensured that the components have 'bedded in', this internal friction will be greatly reduced.

A period of careful running-in will ensure lower exhaust emissions, and will optimize performance, fuel economy and longevity of the engine and other motorcycle components.

During the first 500 miles (800 kms):

- Do not use full throttle;
- Avoid high engine speeds at all times;
- Avoid riding at one constant engine speed, whether fast or slow, for a long period of time;
- Avoid aggressive starts, stops, and rapid accelerations, except in an emergency;
- Do not ride at speeds greater than 3/4 of maximum speed.

From 500 to 1000 miles (800 to 1500 kms):

- Engine speed can gradually be increased to the rev limit for short periods.

Both during and after breaking-in has been completed:

- Do not over-rev the engine when cold;
- Do not lug the engine. Always downshift before the engine begins to 'struggle';
- Do not ride with engine speeds unnecessarily high. Changing up a gear helps reduce fuel consumption, reduces noise and helps to protect the environment.

Safe Operation

Daily Safety Checks

Check the following items each day before you ride. The time required is minimal, and these checks will help ensure a safe, reliable ride.

If any irregularities are found during these checks, refer to the Maintenance and Adjustment section or see your authorized Triumph dealer for the action required to return the motorcycle to a safe operating condition.

Warning

Failure to perform these checks every day before you ride may result in serious motorcycle damage or an accident causing serious injury or death.

Check:-

Fuel: Adequate supply in tank, no fuel leaks (page *31*).

Engine Oil: Correct level on dipstick. Add correct specification oil as required. No leaks from the engine or oil cooler (page *63*).

Drive Belt: Correct adjustment. No damage/cuts, frayed edges, or broken teeth (page *81*).

Tires/Wheels: Correct inflation pressures (when cold). Tread depth/wear, tire/wheel damage, punctures etc. (page *87*).

Nuts, Bolts, Fasteners: Visually check that steering and suspension components, axles, and all controls are properly tightened or fastened. Inspect all areas for loose/damaged fixings.

Steering Action: Smooth but not loose from lock to lock. No binding of any of the control cables (page *78*).

Brakes: Pull the brake lever and push the brake pedal to check for correct resistance. Investigate any lever/pedal where the travel is excessive before meeting resistance, or if either control feels spongy in operation (page *73*).

Brake Pads: There should be more than 0.06 in (1.5 mm) of friction material remaining on all brake pads (page *73*).

Brake Fluid Levels: No brake fluid leakage. Brake fluid levels must be between the MAX and MIN marks on both reservoirs (page *75*).

Front Forks: Smooth action. No leaks from fork seals (page *80*).

Throttle: Throttle grip free play 0.08 - 0.12 in (2 - 3 mm). Ensure that the throttle grip returns to the idle position without sticking (page *69*).

Clutch: Smooth operation and correct cable free play (page *72*).

Coolant: No coolant leakage. Check the coolant level in the expansion tank (when the engine is cold) (page *66*).

Electrical Equipment: All lights and horn function correctly (page *26*).

Engine Stop: Stop switch turns the engine off (page *42*).

Stands: Return to the fully up position by spring tension. Return springs not weak or damaged (page *35*).

HOW TO RIDE THE MOTORCYCLE

Table of Contents

To Stop the Engine 42
To Start the Engine 42
Moving Off 43
Shifting Gears 44
Braking 45
ABS (Anti-Lock Brake System) models only 47
Parking 48
Considerations for High-Speed Operation 49
General 50
Steering 50
Luggage 50
Brakes 50
Tires 50
Fuel 50
Engine Oil 50
Drive Belt 51
Coolant 51
Electrical Equipment 51
Miscellaneous 51

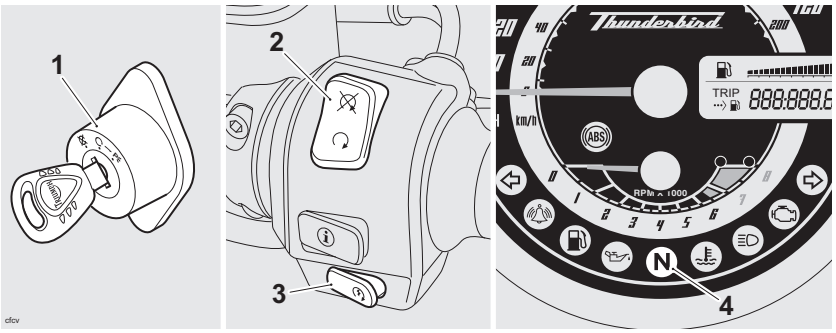

1. **Ignition switch**
2. **Engine stop switch**
3. **Starter button**
4. **Neutral light**

To Stop the Engine

Close the throttle completely.

Select neutral.

Turn the ignition switch off.

Select first gear.

Support the motorcycle on a firm, level surface with the side stand (see page *48*).

Lock the steering (see page *28*).

⚠ Caution

The engine should normally be stopped by turning the ignition switch to the OFF position. The engine stop switch is for emergency use only. Do not leave the ignition switched on with the engine stopped. Electrical damage may result.

To Start the Engine

Check that the engine stop switch is in the RUN position.

Ensure the transmission is in neutral.

Turn the ignition switch on.

Note:

- **When the ignition is switched on, the instrument warning lights will illuminate and will then go off (except those which normally remain on until the engine starts - see 'Warning Lights' on page *24*).**

Pull the clutch lever fully into the handlebar.

Leaving the throttle fully closed, push the starter button until the engine starts.

Warning

Never start the engine or run the engine in a confined area. Exhaust fumes are poisonous and can cause loss of consciousness and death within a short period of time. Always operate your motorcycle in the open-air or in an area with adequate ventilation.

Caution

Do not operate the starter continuously for more than 5 seconds as the starter motor will overheat and the battery will become discharged. Wait 15 seconds between each operation of the starter to allow for cooling and recovery of battery power.

Do not let the engine idle for long periods as this may lead to overheating which will cause damage to the engine.

Caution

The low oil pressure warning light should go out shortly after the engine starts.

If the low oil pressure warning light stays on after starting the engine, stop the engine immediately and investigate the cause. Running the engine with low oil pressure will cause severe engine damage.

- The motorcycle is equipped with starter lockout switches. The switches prevent the electric starter from operating when the transmission is not in neutral with the side stand down.
- If the side stand is extended while the engine is running, and the transmission is not in neutral then the engine will stop regardless of clutch position.

Moving Off

Pull in the clutch lever and select first gear. Open the throttle a little and let out the clutch lever slowly. As the clutch starts to engage, open the throttle a little more, allowing enough engine speed to avoid stalling.

Shifting Gears

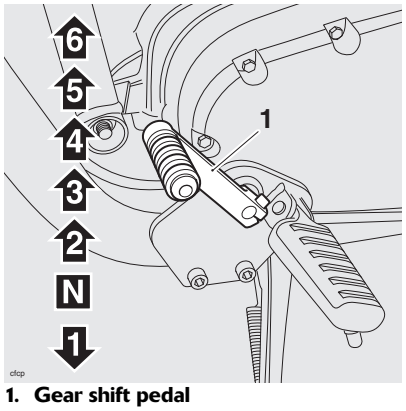

1. Gear shift pedal

Close the throttle while pulling in the clutch lever. Shift into the next higher or lower gear. Open the throttle part way, while releasing the clutch lever. Always use the clutch when shifting gear.

Warning

Take care to avoid opening the throttle too far or too fast in any of the lower gears as this can lead to the front wheel lifting from the ground (pulling a 'wheelie') and to the rear tire breaking traction (wheel spin).

Always open the throttle cautiously, particularly if you are unfamiliar with the motorcycle, as a 'wheelie' or loss of traction will cause loss of motorcycle control and an accident.

Note:

- **The gear shift mechanism is the 'positive stop' type. This means that, for each movement of the gear shift pedal/lever, you can only select each gear, one after the other, in ascending or descending order.**

Warning

Do not shift to a lower gear at speeds that will cause excessive engine rpm (r/min). This can lock the rear wheel causing loss of control and an accident. Engine damage may also be caused. Changing down should be done such that low engine speeds will be ensured.

Braking

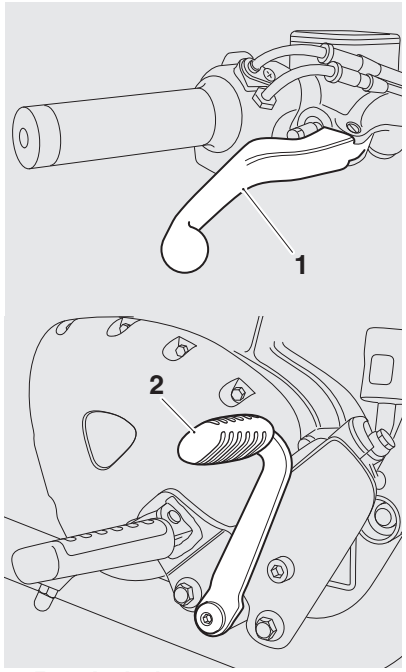

1. **Front brake lever**
2. **Rear brake pedal**

Warning

WHEN BRAKING, OBSERVE THE FOLLOWING:

Close the throttle completely, leaving the clutch engaged to allow the engine to help slow down the motorcycle.

Shift down one gear at a time such that the transmission is in first gear when the motorcycle comes to a complete stop.

When stopping, always apply both brakes at the same time. Normally the front brake should be applied a little more than the rear.

Shift down or fully disengage the clutch as necessary to keep the engine from stalling.

Never lock the brakes, as this may cause loss of control of the motorcycle and an accident.

Warning

For emergency braking, disregard down changing, and concentrate on applying the front and rear brakes as hard as possible without skidding. Riders should practice emergency braking in a traffic-free area.

Incorrect brake technique could result in loss of control and an accident.

Triumph strongly recommends that all riders take a course of instruction, which includes advice on safe brake operation.

Warning

For your safety, always exercise extreme caution when braking (whether or not ABS is fitted), accelerating or turning as any improper action can cause loss of control and an accident. Independent use of the front or rear brakes reduces overall braking performance. Extreme braking may cause either wheel to lock, reducing control of the motorcycle and causing an accident (see ABS warnings below).

When possible, reduce speed or brake before entering a turn as closing the throttle or braking in mid-turn may cause wheel slip leading to loss of control and an accident.

When riding in wet or rainy conditions, or on loose surfaces, the ability to manoeuvre and stop will be reduced. All of your actions should be smooth under these conditions. Sudden acceleration, braking or turning may cause loss of control and an accident.

Warning

When descending a long steep gradient, use engine braking by down changing and use the brakes intermittently. Continuous brake application can overheat the brakes and reduce their effectiveness.

Riding with your foot on the brake pedal or your hands on the brake lever may actuate the brake light, giving a false indication to other road users. It may also overheat the brake, reducing braking effectiveness.

Do not coast with the engine switched off, and do not tow the motorcycle. The transmission is pressure-lubricated only when the engine is running. Inadequate lubrication may cause damage or seizure of the transmission, which can lead to sudden loss of motorcycle control and an accident.

ABS (Anti-Lock Brake System) models only

Warning

Where fitted, ABS prevents the wheels from locking, therefore maximizing the effectiveness of the braking system in emergencies and when riding on slippery surfaces. The potentially shorter braking distances ABS allows under certain conditions are not a substitute for good riding practice.

Always ride within the legal speed limit.

Never ride without due care and attention and always reduce speed in consideration of weather, road and traffic conditions.

Take care when cornering. If the brakes are applied in a corner, ABS will not be able to counteract the weight and momentum of the motorcycle. This can result in loss of control and an accident.

Under some circumstances it is possible that a motorcycle equipped with ABS may require a longer stopping distance than an equivalent motorcycle without ABS.

ABS Warning Light

The ABS indicator light illuminates to show that the ABS function is not available. Illumination is normal after engine start-up, and until the motorcycle first reaches a speed exceeding 6 mph (10 km/h). Unless there is a fault, it should not illuminate again until the engine is restarted.

If the indicator light becomes illuminated at any other time while riding, it indicates that the ABS has a malfunction that requires investigation.

Note:

- **Normally, the rider will perceive ABS operation as a harder feel or a pulsation of the brake lever and pedal. As the ABS is not an integrated braking system and it does not control both the front and rear brake at the same time, this pulsation may be felt in the lever, the pedal or both.**
- **The ABS may be activated by sudden upward or downward changes in the road surface.**

Warning

If the ABS is not functioning, the brake system will continue to function as a non-ABS braking system. Do not continue to ride for longer than is necessary with the indicator light illuminated. Contact an authorized Triumph dealer as soon as possible to have the fault checked and rectified. In this situation, braking too hard will cause the wheels to lock resulting in loss of control and an accident.

Warning

The ABS warning light will illuminate when the rear wheel is driven at high speed for more than 30 seconds when the motorcycle is on a stand. This reaction is normal.

When the ignition is switched off and the motorcycle is re-started, the warning light will illuminate until the motorcycle reaches a speed exceeding 19 mph (30 km/h).

Warning

The ABS computer operates by comparing the relative speed of the front and rear wheels. Use of non-recommended tires can affect wheel speed and cause the ABS function not to operate, potentially leading to loss of control and an accident in conditions where the ABS would normally function.

Parking

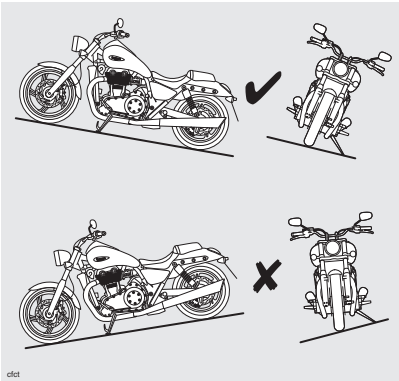

Select neutral and turn the ignition switch to the OFF position.

Lock the steering to help prevent theft.

Always park on a firm, level surface to prevent the motorcycle from falling.

When parking on a hill, always park facing uphill to prevent the motorcycle from rolling off the stand. Engage first gear to prevent the motorcycle from moving.

On a lateral (sideways) incline, always park such that the incline naturally pushes the motorcycle towards the sidestand.

Do not park on a lateral (sideways) incline of greater than 6° and never park facing downhill.

Note:

- **When parking near traffic at night, or when parking in a location where parking lights are required by law, leave the tail, license plate and position lights on by turning the ignition switch to P (PARK).**

Do not leave the switch in the P position for long periods of time as this will discharge the battery.

Ensure that the side stand is fully retracted before riding off.

Warning

Do not park on a soft or on a steeply inclined surface. Parking under these conditions may cause the motorcycle to fall over causing damage to property and personal injury.

Warning

Gasoline is extremely flammable and can be explosive under certain conditions. If parking inside a garage or other structure, be sure it is well ventilated and the motorcycle is not close to any source of flame or sparks. This includes any appliance with a pilot light.

Failure to follow the above advice may cause a fire resulting in damage to property or personal injury.

Warning

The engine and exhaust system will be hot after riding. DO NOT park where pedestrians and children are likely to touch the motorcycle.

Touching any part of the engine or exhaust system when hot may cause unprotected skin to become burnt.

Considerations for High-Speed Operation

Warning

This Triumph motorcycle should be operated within the legal speed limits for the particular road travelled. Operating a motorcycle at high speeds can be potentially dangerous since the time available to react to given traffic situations is greatly reduced as road speed increases. Always reduce speed in consideration of weather and traffic conditions.

Warning

Only operate this Triumph motorcycle at high speed in closed-course on-road competition or on closed-course racetracks. High-speed operation should only then be attempted by riders who have been instructed in the techniques necessary for high-speed riding and are familiar with the motorcycle's characteristics in all conditions.

High-speed operation in any other circumstances is dangerous and will lead to loss of motorcycle control and an accident.

Warning

The handling characteristics of a motorcycle at high speed may vary from those you are familiar with at legal road speeds. Do not attempt high-speed operation unless you have received sufficient training and have the required skills as a serious accident may result from incorrect operation.

Warning

The items listed are extremely important and must never be neglected. A problem, which may not be noticed at normal operating speeds, may be greatly exaggerated at high speeds.

General

Ensure the motorcycle has been maintained according to the scheduled maintenance chart.

Steering

Check that the handlebar turns smoothly without excessive free play or tight spots. Ensure that the control cables do not restrict the steering in any way.

Luggage

Make certain that any luggage containers are closed, locked and securely fitted to the motorcycle.

Brakes

Check that the front and rear brakes are functioning properly.

Tires

High-speed operation is hard on tires, and tires that are in good condition are crucial to riding safely. Examine their overall condition, inflate to the correct pressure (when the tires are cold), and check the wheel balance. Securely install the valve caps after checking tire pressures. Observe the information given in the maintenance and specification sections on tire checking and tire safety.

Fuel

Have sufficient fuel for the increased fuel consumption that will result from high-speed operation.

Caution

In many countries, the exhaust system for this model is fitted with a catalytic converter to help reduce exhaust emission levels. The catalytic converter can be permanently damaged if the motorcycle is allowed to run out of fuel or if the fuel level is allowed to get very low. Always ensure you have adequate fuel for your journey.

Engine Oil

Make certain that the engine oil level is correct. Ensure that the correct grade and type of oil is used when topping off.

Drive Belt

Make certain that the drive belt is correctly adjusted. Inspect the belt for wear, damage/cuts, frayed edges, or broken teeth.

Coolant

Check that the coolant level is at the upper level line in the expansion tank. (Always check the level with the engine cold.)

Electrical Equipment

Make certain that the headlight, rear/brake light, direction indicators, horn etc., all work properly.

Miscellaneous

Visually check that all fixings are tight.

This page intentionally left blank

ACCESSORIES AND LOADING

The addition of accessories and carrying of additional weight can affect the motorcycle's handling characteristics causing changes in stability and necessitating a reduction in speed. The following information has been prepared as a guide to the potential hazards of adding accessories to a motorcycle and carrying passengers and additional loads.

Warning

Incorrect loading may result in an unsafe riding condition leading to an accident.

Always ensure any loads carried are evenly distributed on both sides of the motorcycle. Ensure that the load is correctly secured such that it will not move around while the motorcycle is in motion.

Always check the load security regularly (though not while the motorcycle is in motion) and ensure that the load does not extend beyond the rear of the motorcycle.

Never exceed the maximum vehicle loading weight of 509 lb (231 kg).

This maximum loading weight is made up from the combined weight of the rider, passenger, any accessories fitted and any load carried.

Warning

Do not install accessories or carry luggage that impairs the control of the motorcycle. Make sure that you have not adversely affected any lighting component, road clearance, banking capability (i.e. lean angle), control operation, wheel travel, front fork movement, visibility in any direction, or any other aspect of the motorcycle's operation.

Warning

Never ride an accessory equipped motorcycle, or a motorcycle carrying a payload of any kind, at speeds above 80 mph (130 km/h). In either/both of these conditions, speeds in excess of 80 mph (130 km/h) should not be attempted even where the legal speed limit permits this.

The presence of accessories and/or payload will cause changes in the stability and handling of the motorcycle.

Failure to allow for changes in motorcycle stability may lead to loss of control or an accident.

Remember that the 80 mph (130 km/h) absolute limit will be reduced by the fitting of non-approved accessories, incorrect loading, worn tires, overall motorcycle condition and poor road or weather conditions.

Warning

This motorcycle must not be operated above the legal road speed limit except in authorized closed-course conditions.

Warning

Only operate this Triumph motorcycle at high speed in closed-course on-road competition or on closed-course racetracks. High-speed operation should only then be attempted by riders who have been instructed in the techniques necessary for high-speed riding and are familiar with the motorcycle's characteristics in all conditions.

High-speed operation in any other circumstances is dangerous and will lead to loss of motorcycle control and an accident.

Warning

Your passenger should be instructed that he or she can cause loss of motorcycle control by making sudden movements or by adopting an incorrect seated position.

The rider should instruct the passenger as follows:

- It is important that the passenger sits still while the motorcycle is in motion and does not interfere with the operation of the motorcycle.
- To keep his or her feet on the passenger footrests and to firmly hold onto the seat strap or the rider's waist or hips.
- Advise the passenger to lean with the rider when travelling around corners and not to lean unless the rider does so.

Warning

Do not carry a passenger unless he or she is tall enough to reach the footrests provided.

A passenger who is not tall enough to reach the footrests will be unable to sit securely on the motorcycle and may cause instability leading to loss of control and an accident.

Warning

The handling and braking capabilities of a motorcycle will be affected by the presence of a passenger. The rider must make allowances for these changes when operating the motorcycle with a passenger and should not attempt such operation unless trained to do so and without becoming familiar and comfortable with the changes in motorcycle operating characteristics that this brings about.

Motorcycle operation without making allowances for the presence of a passenger could lead to loss of motorcycle control and an accident.

Warning

Never attempt to store any items between the frame and the fuel tank. This can restrict the steering and will cause loss of control leading to an accident.

Weight attached to the handlebar or front fork will increase the mass of the steering assembly and can result in loss of steering control leading to an accident.

Warning

Do not carry animals on your motorcycle.

An animal could make sudden and unpredictable movements that could lead to loss of motorcycle control and an accident.

Warning

If the passenger seat is used to carry small objects, they must not exceed 11 lb (5 kg) in weight, must not impair control of the motorcycle, must be securely attached and must not extend beyond the rear or sides of the motorcycle.

Carrying of objects in excess of 11 lb (5 kg) in weight, that are insecure, impair control or extend beyond the rear or sides of the motorcycle may lead to loss of motorcycle control and an accident.

Even if small objects are correctly loaded onto the rear seat, the maximum speed of the motorcycle must be reduced to 80 mph (130 km/h).

This page intentionally left blank

MAINTENANCE AND ADJUSTMENT

Table of Contents

Scheduled Maintenance 60
Engine Oil 63
Oil Level Inspection 63
Oil and Oil Filter Change 64
Disposal of Used Engine Oil and Oil Filters 65
Oil Specification and Grade 65
Cooling System 66
Corrosion Inhibitors 66
Coolant Level Inspection 67
Coolant Level Adjustment 67
Coolant Change 68
Radiator and Hoses 68
Throttle Control 69
Inspection 70
Clutch 72
Inspection 72
Adjustment 72
Brakes 73
Brake Wear Inspection 73
Brake Pad Wear Compensation 73
Disc Brake Fluid 74
Brake Fluid Level Inspection and Adjustment 75
Brake Light Switches 76
Windshield Cleaning (if fitted as an accessory) 77
Steering/Wheel Bearings 78
Steering Inspection 78
Inspecting the Steering Head (Headstock) Bearings for Free Play 78
Wheel Bearings Inspection 79

Maintenance and Adjustment

Front Suspension 80
- Front Fork Inspection 80
- Suspension Adjustment 80
- Suggested Suspension Settings 81

Final Drive Belt 81
- Final Drive Belt Tension Inspection 82
- Final Drive Belt Tension Adjustment 86

Tires 87
- Tire Inflation Pressures 87
- Tire Wear 87
- Minimum Recommended Tread Depth 87
- Tire Replacement 88

Battery 91
- Battery Removal 91
- Battery Disposal 92
- Battery Maintenance 92
- Battery Discharge 92
- Battery Discharge During Storage and Infrequent Use of the Motorcycle 92
- Battery Charging 93
- Battery Installation 93

Fuse Box 94
- Fuse Identification 94

Headlights 95
- Headlight Vertical Adjustment 96
- Headlight Horizontal Adjustment 96
- Headlight Bulb Replacement 97

Brake/Tail Light 98
- Brake/Tail Light Replacement 98

Turn Signal Lights 98
- Bulb Replacement 98

Maintenance and Adjustment

Cleaning 99
Preparation for Washing 99
Where to be Careful 100
After Washing 100
Unpainted Aluminum Items 100
Cleaning of the Exhaust System 101
Washing 101
Drying 101
Protecting 101

Scheduled Maintenance

To maintain the motorcycle in a safe and reliable condition, the maintenance and adjustments outlined in this section must be carried out as specified in the schedule of daily checks, and also in line with the scheduled maintenance chart. The information that follows describes the procedures to follow when carrying out the daily checks and some simple maintenance and adjustment items.

Warning

Special tools, knowledge and training are required in order to correctly carry out the maintenance items listed in the scheduled maintenance chart. Only an authorized Triumph dealer will have this knowledge and equipment.

Since incorrect or neglected maintenance can lead to a dangerous riding condition, always have an authorized Triumph dealer carry out the scheduled maintenance of this motorcycle.

Warning

All maintenance is vitally important and must not be neglected. Incorrect maintenance or adjustment may cause one or more parts of the motorcycle to malfunction. A malfunctioning motorcycle may lead to loss of control and an accident.

Weather, terrain and geographical location affects maintenance. The maintenance schedule should be adjusted to match the particular environment in which the vehicle is used and the demands of the individual owner.

Since incorrect or neglected maintenance can lead to a dangerous riding condition, always have an authorized Triumph dealer carry out the scheduled maintenance of this motorcycle.

Triumph Motorcycles cannot accept any responsibility for damage or injury resulting from incorrect maintenance or improper adjustment carried out by the owner.

Operation Description	Odometer Reading in Miles (Kms) or Time Period, whichever comes first					
		First Service	A Service	B Service	C Service	D Service
	Every	500 (800) 1 month	6,000 (10,000) 1 year	12,000 (20,000) 2 years	18,000 (30,000) 3 years	24,000 (40,000) 4 years
Engine - check for leaks	Day	•	•	•	•	•
Engine oil - replace	-	•	•	•	•	•
Engine oil filter - replace	-	•	•	•	•	•
Valve clearances - check	-			•		•
Air cleaner - replace	-			•		•
Engine ECM - check for stored DTCs and latest calibration	-	•	•	•	•	•
Spark plugs - check	-		•		•	
Spark plugs - replace	-			•		•
Throttle bodies - balance	-		•	•	•	•
Throttle cables - check/adjust	Day	•	•	•	•	•
Cooling system - check for leaks	-	•	•	•	•	•
Coolant level - check/adjust	Day	•	•		•	
Coolant - replace	-			•		•
Fuel system - check for leaks, chafing etc.	Day	•	•	•	•	•
Fuel filter - replace	-			•		•
Lights, instruments & electrical systems - check	Day	•	•	•	•	•
Steering - check for free operation	Day	•	•	•	•	•
Steering head bearings - check/adjust	-	•	•	•	•	•
Steering head bearings - lubricate	-			•		•

Operation Description	Odometer Reading in Miles (Kms) or Time Period, whichever comes first					
		First Service	A Service	B Service	C Service	D Service
	Every	500 (800) 1 month	6,000 (10,000) 1 year	12,000 (20,000) 2 years	18,000 (30,000) 3 years	24,000 (40,000) 4 years
Forks - check for leaks/smooth operation	Day	•	•	•	•	•
Fork oil - replace	-					•
Brake fluid levels - check	Day	•	•	•	•	•
Brake fluid - replace	Every 2 years					
Brake pads - check wear levels	Day	•	•	•	•	•
Brake calipers - check for fluid leaks and seized pistons	-	•	•	•	•	•
Brake master cylinders - check for fluid leaks	-	•	•	•	•	•
Drive belt tension - check and adjust	Day	•	Every 2,500 Miles (4,000 Km)			
Drive belt - inspect for wear or damage	Day		•	•	•	•
Wheels - inspect for damage	Day	•	•	•	•	•
Wheel and belt pulley bearings - check for wear/smooth operation		•	•	•	•	•
Tire wear/tire damage - check	Day	•	•	•	•	•
Tire pressures - check/adjust	Day	•	•	•	•	•
Fasteners - inspect visually for security	Day	•	•	•	•	•
Clutch cable - check/adjust	Day	•	•	•	•	•
Side stand - check operation	Day	•	•	•	•	•
Fuel and evaporative loss* hoses - replace	-					•

*Evaporative system fitted to California models only.

Engine Oil

In order for the engine, transmission, and clutch to function correctly, maintain the engine oil at the correct level, and change the oil and oil filter in accordance with scheduled maintenance requirements.

Warning

Motorcycle operation with insufficient, deteriorated, or contaminated engine oil will cause accelerated engine wear and may result in engine or transmission seizure. Seizure of the engine or transmission may lead to sudden loss of control and an accident.

Oil Level Inspection

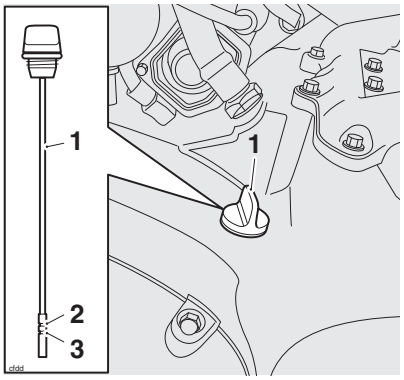

1. **Filler cap/Dipstick**
2. **Maximum mark**
3. **Minimum mark**

Caution

Ensure no foreign matter or contamination enters the engine during an oil change or top-up. Contamination entering the engine may lead to engine damage.

Stop the engine.

Carefully clean the area around the filler cap/dipstick before removal.

Remove the filler cap/dipstick from the crankcase, wipe the dipstick clean and refit the filler cap/dipstick, screwing it fully home.

Note:

- **The actual level is indicated when the motorcycle is upright, (not on the side stand) and when the filler cap/dipstick has been pushed fully home.**

Remove the filler cap/dipstick.

The maximum oil level is indicated by a mark on the filler cap/dipstick. When the oil level is correct, the indicated oil level must be between the maximum and minimum lines on the dipstick.

If the oil level is too low, add oil a little at a time until the correct level is reached.

Once the correct level is reached, install the filler cap/dipstick.

Oil and Oil Filter Change

The engine oil and filter must be renewed in accordance with scheduled maintenance requirements.

To change the engine oil and filter, follow the instructions below/over.

Warning

Prolonged or repeated contact with engine oil can lead to skin dryness, irritation and dermatitis. In addition, used engine oil contains harmful contamination that can lead to skin cancer. Always wear suitable protective clothing and avoid skin contact with used oil.

Warm up the engine thoroughly then stop the engine and secure the motorcycle in an upright position.

Allow the oil to settle for 5 minutes before draining.

Warning

The oil may be hot to the touch. Avoid contact with the hot oil by wearing suitable protective clothing, gloves, eye protection, etc. Contact with hot oil may cause the skin to be scalded or burned.

Place an oil drain pan beneath the engine.

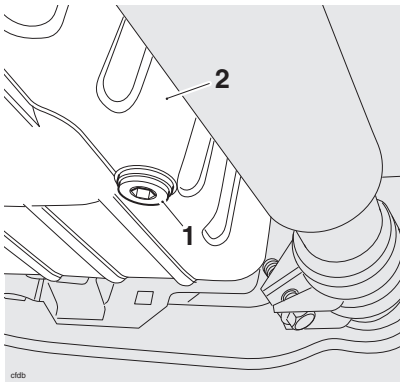

1. **Sump plug**
2. **Engine sump**

Remove the sump plug from the bottom of the sump and allow the oil to drain.

Incorporating a new washer, refit the sump plug, tightening it to **18 lbf ft (25 Nm)**.

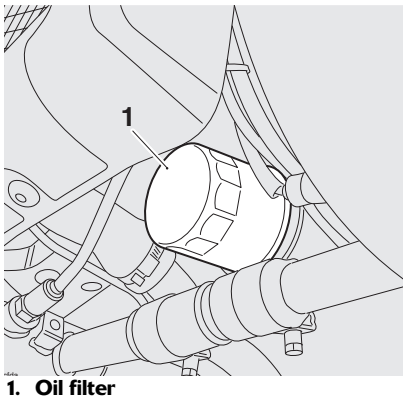

1. **Oil filter**

Position the oil drain pan beneath the oil filter.

Unscrew and remove the oil filter using Triumph service tool T3880313. Dispose of

the old filter in an environmentally friendly way.

Apply a thin smear of clean engine oil to the sealing ring of the new oil filter. Install the oil filter and tighten to **7 lbf ft (10 Nm)**.

Fill the engine to the maximum mark with a 10W/40 or 15W/50 semi or fully synthetic motorcycle engine oil that meets specification API SH (or higher) AND JASO MA.

Start the engine and allow it to idle for a minimum of 30 seconds.

Caution

Raising the engine speed above idle, before the oil reaches all parts of the engine can cause engine damage or seizure. Only raise engine speed after running the engine for 30 seconds to allow the oil to circulate fully.

Caution

If the engine oil pressure is too low, the low oil pressure warning light will illuminate. If this light stays on when the engine is running, stop the engine immediately and investigate the cause. Running the engine with low oil pressure will cause engine damage.

Ensure that the low oil pressure warning light extinguishes shortly after starting.

Turn off the ignition, check the oil level using the method previously described, and top off to between the minimum and maximum level lines on the dipstick.

Disposal of Used Engine Oil and Oil Filters

To protect the environment, do not pour oil on the ground, down sewers or drains, or into watercourses. Do not place used oil filters in with general waste. If in doubt, contact your local authority.

Oil Specification and Grade

Triumph high performance fuel injected engines are designed to use 10W/40 or 15W/50 semi or fully synthetic motorcycle engine oil that meets specification API SH (or higher) AND JASO MA.

Do not add any chemical additives to the engine oil. The engine oil also lubricates the clutch and any additives could cause the clutch to slip.

Do not use mineral, vegetable, non-detergent oil, castor based oils or any oil not conforming to the required specification. The use of these oils may cause instant, severe engine damage.

Cooling System

To ensure efficient engine cooling, check the coolant level each day before riding the motorcycle, and top off the coolant if the level is low.

Note:

- **A year-round, Hybrid Organic Acid Technology (known as Hybrid OAT or HOAT) coolant is installed in the cooling system when the motorcycle leaves the factory. It is colored green, contains a 50% solution of ethylene glycol based antifreeze, and has a freezing point of -31°F (-35°C).**

Corrosion Inhibitors

To protect the cooling system from corrosion, the use of corrosion inhibitor chemicals in the coolant is essential.

If coolant containing a corrosion inhibitor is not used, the cooling system will accumulate rust and scale in the water jacket and radiator. This will block the coolant passages, and considerably reduce the efficiency of the cooling system.

Warning

HD4X Hybrid OAT coolant contains corrosion inhibitors and anti-freeze suitable for aluminum engines and radiators. Always use the coolant in accordance with the instructions of the manufacturer.

Coolant that contains anti-freeze and corrosion inhibitors contains toxic chemicals that are harmful to the human body. Never swallow anti-freeze or any of the motorcycle coolant.

Note:

- **HD4X Hybrid OAT coolant, as supplied by Triumph, is pre-mixed and does not need to be diluted prior to filling or topping off the cooling system.**

Coolant Level Inspection

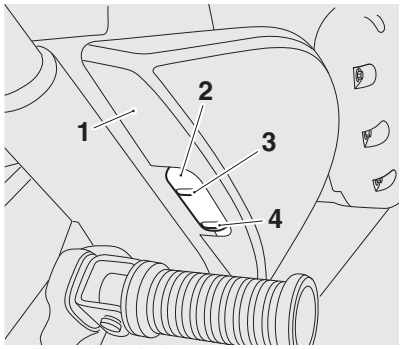

1. **Final drive belt cover**
2. **Expansion tank**
3. **MAX mark**
4. **MIN mark**

Position the motorcycle on level ground and in an upright position.

The coolant level within the expansion tank can be inspected without removing any covers. The expansion tank can be viewed from the right hand side of the motorcycle, through a window in the rear of the final drive belt cover.

Check the coolant level in the expansion tank. The coolant level must be between the MAX (upper line) and MIN (lower line) marks. If the coolant is below the minimum level, the coolant level must be adjusted.

Coolant Level Adjustment

Warning

Do not remove the expansion tank cap or radiator pressure cap when the engine is hot. When the engine is hot, the coolant inside the radiator will be hot and also under pressure. Contact with this hot, pressurized coolant will cause scalds and skin damage.

Allow the engine to cool.

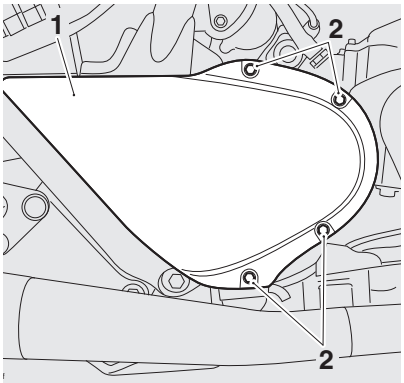

1. **Final drive belt cover**
2. **Final drive belt cover screws**

Remove the final drive belt cover as follows: Release the four screws from the cover and remove.

Remove the cap from the expansion tank, and add coolant mixture through the filler opening until the level reaches the MAX mark. Refit the cap.

Note:

- **If the coolant level is being checked because the coolant has overheated, also check the level in the radiator and top off if necessary.**
- **In an emergency, distilled water can be added to the cooling system. However, the coolant must then be drained and replenished with HD4X Hybrid OAT coolant as soon as possible.**

Caution

If hard water is used in the cooling system, it will cause scale accumulation in the engine and radiator and considerably reduce the efficiency of the cooling system. Reduced cooling system efficiency may cause the engine to overheat and suffer severe damage.

Refit the final drive belt cover as follows: Align the cover to the crankcase. Install and tighten the four screws to **80 lbf in (9 Nm)**.

Coolant Change

Have the coolant changed by an authorized Triumph dealer in accordance with scheduled maintenance requirements.

Radiator and Hoses

Check the radiator hoses for cracks or deterioration, and hose clips for tightness in accordance with scheduled maintenance requirements. Have your authorized Triumph dealer replace any defective items.

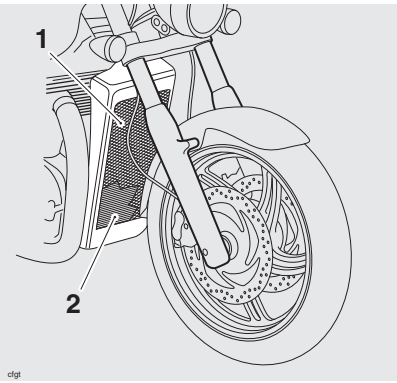

1. **Radiator grille**
2. **Radiator fins**

Check the radiator grille and fins for obstructions by insects, leaves or mud. Clean off any obstructions with a stream of low-pressure water.

Warning

The fan operates automatically when the engine is running. Always keep hands and clothing away from the fan as contact with the rotating fan can cause injury.

Caution

Using high-pressure water sprays, such as from a car wash facility or household pressure washer, can damage the radiator fins, cause leaks and impair the radiator's efficiency.

Do not obstruct or deflect airflow through the radiator by installing unauthorized accessories, either in front of the radiator or behind the cooling fan. Interference with the radiator airflow can cause overheating, potentially resulting in engine damage.

Throttle Control

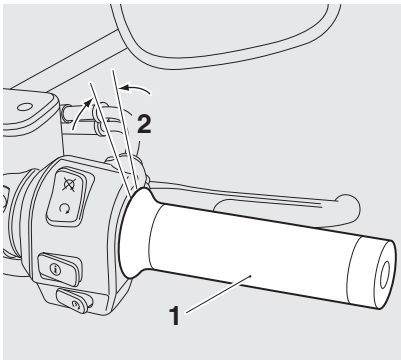

1. **Throttle grip**
2. **Correct setting 0.08-0.12 in (2-3 mm)**

Warning

The throttle grip controls the throttle valves in the throttle bodies. If the throttle cables are incorrectly adjusted, either too tight or too loose, the throttle may be difficult to control and performance will be adversely affected.

Check the throttle grip free play in accordance with scheduled maintenance requirements and make adjustments as necessary.

Always be alert for changes in the 'feel' of the throttle and have the throttle system checked by an authorized Triumph dealer if any changes are detected. Changes can be due to wear in the mechanism, which could lead to a sticking throttle.

An incorrectly adjusted, sticking or stuck throttle will lead to loss of motorcycle control and an accident.

Inspection

Warning

Use of the motorcycle with incorrectly adjusted, incorrectly routed, sticking or damaged throttle cables will interfere with the throttle function resulting in loss of motorcycle control and an accident.

To avoid incorrect adjustment, incorrect routing, or continued use of a sticking or damaged throttle, always have your throttle checked and adjusted by your authorized Triumph dealer.

Check that the throttle opens smoothly, without undue force and that it closes without sticking. Have your authorized Triumph dealer check the throttle system if a problem is detected or any doubt exists.

Check that there is 0.08-0.12 in (2-3 mm) of throttle grip free play when lightly turning the throttle grip back and forth.

If there is an incorrect amount of free play, Triumph recommends that you have adjustments made by your authorized Triumph dealer. However, in an emergency, throttle adjustment may be made as follows:

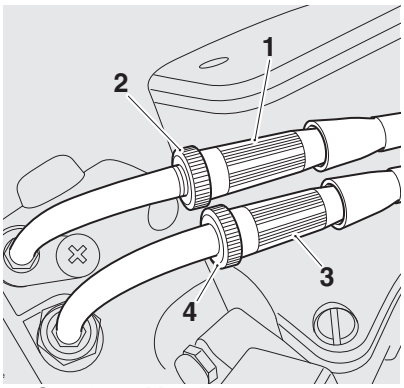

1. **Opening cable adjuster**
2. **Opening cable adjuster locknut**
3. **Closing cable adjuster**
4. **Closing cable adjuster locknut**

Release the locknut on the 'opening' cable adjuster.

Rotate the 'opening' cable adjuster at the twist grip end to give 0.08-0.12 in (2-3 mm) of play at the twist grip. Tighten the locknut.

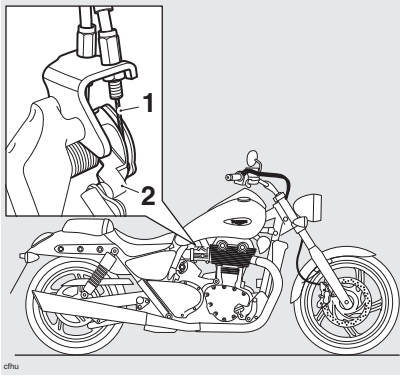

1. **Closing cable**
2. **Throttle cam**

With the throttle fully closed, ensure that there is 0.08-0.12 in (2-3 mm) of free play in the 'closing' cable at the throttle cam attached to the throttle bodies. This is accessible from the right hand side of the motorcycle, below the fuel tank (it is not necessary to remove the fuel tank). If necessary, adjust in the same way as the 'opening' cable (at the twist grip end) until 0.08-0.12 in (2-3 mm) of play is present.

Warning

Ensure that all the adjuster locknuts of both cables are tightened, as a loose locknut could result in a sticking throttle.

An incorrectly adjusted, sticking or stuck throttle can lead to loss of motorcycle control and an accident.

Check that the throttle opens smoothly, without undue force and that it closes without sticking.

Ride carefully to your nearest authorized Triumph dealer and have them check the throttle system thoroughly before riding again.

Clutch

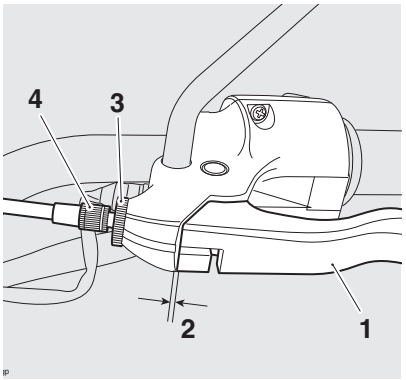

1. **Clutch lever**
2. **Correct setting 0.04-0.08 in (1-2 mm)**
3. **Knurled locknut**
4. **Adjuster sleeve**

The motorcycle is equipped with a cable-operated clutch.

If the clutch lever has excessive free play, the clutch may not disengage fully. This will cause difficulty in changing gear and selecting neutral. This may cause the engine to stall and make the motorcycle difficult to control. Conversely, if the clutch lever has insufficient free play the clutch may not engage fully, causing the clutch to slip, which will reduce performance and cause premature clutch wear.

Clutch lever free play must be checked in accordance with scheduled maintenance requirements.

Inspection

Check that there is 0.04-0.08 in (1-2 mm) clutch lever free play at the lever.

If there is an incorrect amount of free play, adjustments must be made.

Adjustment

Loosen the knurled locknut at the lever end of the clutch cable and turn the adjuster sleeve until the correct amount of clutch lever free play is achieved.

Tighten the knurled locknut against the clutch lever assembly.

If correct adjustment cannot be made using the lever adjuster, use the cable adjuster at the lower end of the cable, located to the left of the radiator, adjacent to the frame.

Loosen the adjuster locknut.

Turn the outer cable adjuster to give 0.04-0.08 in (1-2 mm) of free play at the clutch lever.

Tighten the locknut.

Brakes

Brake Wear Inspection

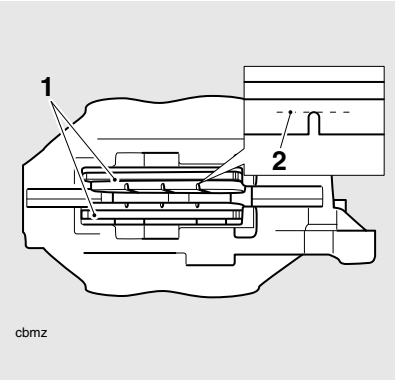

1. **Brake pads**
2. **Minimum thickness line**

Brake pads must be inspected in accordance with scheduled maintenance requirements and replaced if worn to, or beyond the minimum service thickness.

If the lining thickness of any pad (front or rear brakes) is less than 0.06 in (1.5 mm), that is, if the pad has worn down to the bottom of the grooves, replace all the pads on the wheel.

Warning

Brake pads must always be replaced as a wheel set. At the front, where two calipers are installed on the same wheel, replace all the brake pads in both calipers.

Replacing individual pads will reduce braking efficiency and may cause an accident.

After replacement brake pads have been installed, ride with extreme caution until the new pads have 'broken in'.

Brake Pad Wear Compensation

Disc and brake pad wear is automatically compensated for and has no effect on the brake lever or pedal action. There are no parts that require adjustment on the front and rear brakes.

Warning

If the brake lever or pedal feels soft when it is applied, or if the lever/pedal travel becomes excessive, there may be air in the brake lines and hoses or the brakes may be defective.

It is dangerous to operate the motorcycle under such conditions and your authorized Triumph dealer must rectify the fault before riding.

Riding with defective brakes may lead to loss of motorcycle control and an accident.

Disc Brake Fluid

Inspect the level of brake fluid in both reservoirs and change the brake fluid in accordance with scheduled maintenance requirements. Use only DOT 4 fluid as recommended in the Specification section. The brake fluid must also be changed if it becomes, or is suspected of having become contaminated with moisture or any other contaminants.

Warning

Brake fluid is hygroscopic which means it will absorb moisture from the air.

Any absorbed moisture will greatly reduce the boiling point of the brake fluid causing a reduction in braking efficiency.

Because of this, always replace brake fluid in accordance with scheduled maintenance requirements.

Always use new brake fluid from a sealed container and never use fluid from an unsealed container or from one which has been previously opened.

Do not mix different brands or grades of brake fluid.

Check for fluid leakage around brake fittings, seals and joints and also check the brake hoses for splits, deterioration and damage.

Always rectify any faults before riding.

Failure to observe and act upon any of these items may cause a dangerous riding condition leading to loss of control and an accident.

Warning

If the ABS is not functioning, the brake system will continue to function as a standard non-ABS braking system. In this situation, braking too hard will cause the wheels to lock resulting in loss of control and an accident.

Reduce speed and do not continue to ride for longer than is necessary with the indicator light illuminated. Contact an authorized Triumph dealer as soon as possible to have the fault checked and rectified.

Note:

- **On models fitted with ABS, a special tool is required to bleed the braking system. Contact your authorized Triumph dealer when the brake fluid needs renewing or the hydraulic system requires maintenance.**

Brake Fluid Level Inspection and Adjustment

Front brakes

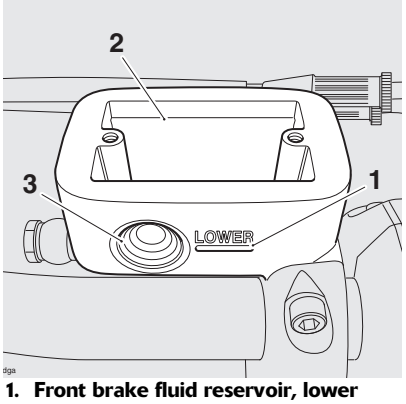

1. **Front brake fluid reservoir, lower level line**
2. **Upper level line**
3. **Fluid level window**

The brake fluid level in the reservoirs must be kept between the upper and lower level lines (reservoir held horizontal).

To inspect the front fluid level, check the level of fluid visible in the window at the front of the reservoir body.

Release the screws securing the front brake reservoir cover, then remove the cover.

Fill the reservoir to the upper level line using new DOT 4 fluid from a sealed container.

Refit the reservoir cover ensuring that the diaphragm seal is correctly installed. Tighten the screws to **18 lbf in (2 Nm)**.

Rear brake

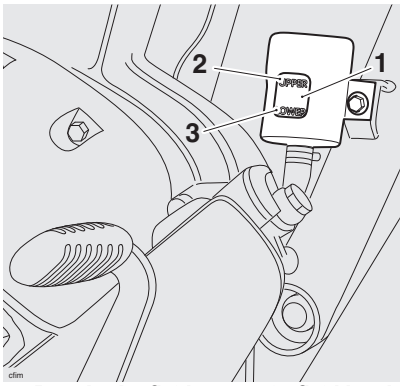

1. **Rear brake fluid reservoir, fluid level window**
2. **Upper level line**
3. **Lower level line**

The rear brake fluid level is visible from the right hand side without removing the reservoir or cover.

To adjust the rear brake fluid level, release the fixing securing the reservoir and cover to the frame and detach the reservoir and cover. Place the cover aside.

Remove the cap noting the position of the diaphragm inside.

Fill the reservoir to the upper level line using DOT 4 fluid from a sealed container, with the motorcycle supported in an upright position.

Refit the reservoir cap ensuring that the diaphragm seal is correctly positioned between the cap and reservoir body.

Position the reservoir and cover to the frame and secure with the fixing previously removed. Tighten the fixing to **44 lbf in (5 Nm)**.

Warning

If there has been an appreciable drop in the level of the fluid in either fluid reservoir, consult your authorized Triumph dealer for advice before riding. Riding with depleted brake fluid levels, or with a brake fluid leak is dangerous and will cause reduced brake performance potentially leading to loss of motorcycle control and an accident.

Brake Light Switches

The brake light is activated independently by either the front or rear brake. If, with the ignition in the ON position, the brake light does not work when the front brake lever is pulled or the rear brake pedal is pressed, have your authorized Triumph dealer investigate and rectify the fault.

Warning

Riding the motorcycle with defective brake lights is illegal and dangerous.

An accident causing injury to the rider and other road users may result from use of a motorcycle with defective brake lights.

Windshield Cleaning (if fitted as an accessory)

Clean the windshield with a solution of mild soap or detergent and lukewarm water. After cleaning, rinse well and then dry with a soft, lint free cloth.

Caution

Products such as window cleaning fluids, insect remover, rain repellent, scouring compounds, gasoline or strong solvents such as alcohol, acetone, carbon tetrachloride, etc. will damage the windshield. Never allow these products to contact the windshield.

If the transparency of the windshield is reduced by scratches or oxidation which cannot be removed, the windshield must be replaced.

Warning

Never attempt to clean the windshield while the motorcycle is in motion as releasing the handlebars may cause loss of vehicle control and an accident.

Operation of the motorcycle with a damaged or scratched windshield will reduce the rider's forward vision. Any such reduction in forward vision is dangerous and may lead to an accident causing injury or death.

Caution

Corrosive chemicals such as battery acid will damage the windshield. Never allow corrosive chemicals to contact the windshield.

Steering/Wheel Bearings

Steering Inspection

Lubricate and inspect the condition of the steering head (headstock) bearings in accordance with scheduled maintenance requirements.

Note:

- **Always inspect the wheel bearings at the same time as the steering bearings.**

Warning

To prevent risk of injury from the motorcycle falling during the inspection, ensure that the motorcycle is stabilized and secured on a suitable support. Do not exert extreme force against each wheel or rock each wheel vigorously as this may cause the motorcycle to become unstable and cause injury by falling from its support.

Ensure that the position of the support block will not cause damage to the sump.

Inspecting the Steering Head (Headstock) Bearings for Free Play

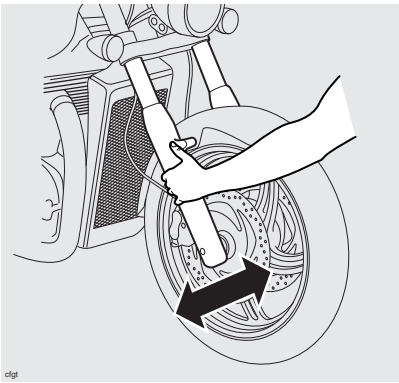

Position the motorcycle on level ground, in an upright position.

Raise the front wheel above the ground and support the motorcycle.

Standing at the front of the motorcycle, hold the lower end of the front forks and try to move them forward and backward.

If any free play can be detected in the steering head (headstock) bearings, ask your authorized Triumph dealer to inspect and rectify any faults before riding.

Warning

Riding the motorcycle with incorrectly adjusted or defective steering head (headstock) bearings is dangerous and may cause loss of motorcycle control and an accident.

Remove the support and place the motorcycle on the side stand.

Wheel Bearings Inspection

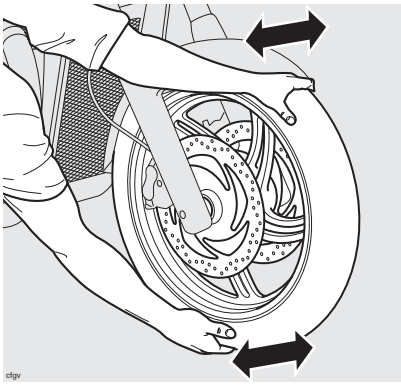

If the wheel bearings in the front or rear wheel allow play in the wheel hub, are noisy, or if the wheel does not turn smoothly, have your authorized Triumph dealer inspect the wheel bearings.

The wheel bearings must be inspected at the intervals specified in the scheduled maintenance chart.

Position the motorcycle on level ground, in an upright position.

Raise the front wheel above the ground and support the motorcycle.

Standing at the side of the motorcycle, gently rock the top of the front wheel from side to side.

If any free play can be detected, ask your authorized Triumph dealer to inspect and rectify any faults before riding.

Reposition the lifting device and repeat the procedure for the rear wheel.

Warning

Operation with worn or damaged front or rear wheel bearings is dangerous and may cause impaired handling and instability leading to an accident. If in doubt, have the motorcycle inspected by an authorized Triumph dealer before riding.

Remove the support and place the motorcycle on the side stand.

Front Suspension

Front Fork Inspection

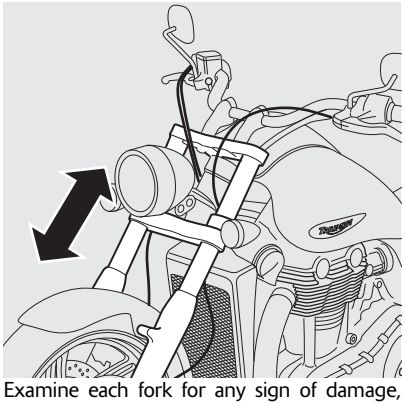

Examine each fork for any sign of damage, scratching of the slider surface, or for oil leaks.

If any damage or leakage is found, consult an authorized Triumph dealer.

To check that the forks operate smoothly:

- Position the motorcycle on level ground.
- While holding the handlebars and applying the front brake, pump the forks up and down several times.
- If roughness or excessive stiffness is detected, consult your authorized Triumph dealer.

Warning

Riding the motorcycle with defective or damaged suspension is dangerous and may lead to loss of control and an accident.

Warning

Never attempt to dismantle any part of the suspension units, as all units contain pressurized oil. Skin and eye damage can result from contact with the pressurized oil.

Suspension Adjustment

Front Suspension

The front suspension is factory set and is not adjustable.

Rear Suspension

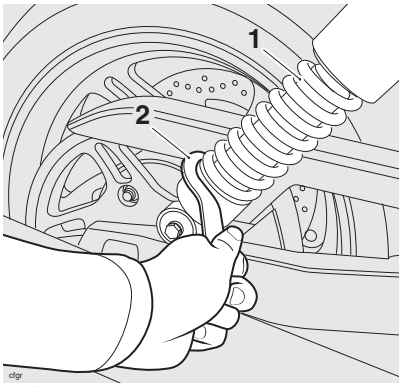

1. Rear suspension unit
2. Adjustment tool

The rear suspension is adjustable for pre-load only.

To change the rear suspension spring pre-load setting, insert the adjustment tool supplied in the tool kit into the hole provided in the adjuster ring.

Turn the adjuster ring clockwise to increase spring pre-load, and anti-clockwise to decrease spring pre-load. When delivered

from the factory, the pre-load adjuster will be set at position 1.

Warning

Ensure that the adjusters are set to the same setting on both rear suspension units. Settings that vary from left to right may affect handling and stability resulting in loss of motorcycle control and an accident.

Suggested Suspension Settings

Adjuster settings are counted from position one with position one being with the adjuster turned fully anti-clockwise. There are five positions in total. Position one gives the minimum amount of spring pre-load.

Riding Condition	Suspension Preload Setting
Rider only	Position 1
Rider and passenger	Position 5
Rider, passenger and luggage	Position 5

Note:

- **The details given in the table are only a guide. Setting requirements may vary for rider and passenger weight and personal preferences.**

Final Drive Belt

For safety and to prevent excessive wear the drive belt must be checked, adjusted and renewed in accordance with scheduled maintenance requirements. Checking and adjustment must be carried out more frequently for extreme conditions such as salty or heavily gritted roads.

If the drive belt is badly worn or incorrectly adjusted (either too loose or too tight) the belt could jump off the drive belt pulleys or break. Therefore, always replace worn or damaged drive belts using genuine Triumph parts supplied by an authorized Triumph dealer. The drive belt requires no lubrication.

Final Drive Belt Tension Inspection

Drive belt tension must be measured using Triumph service tool T3880126, which is available from your Triumph dealer.

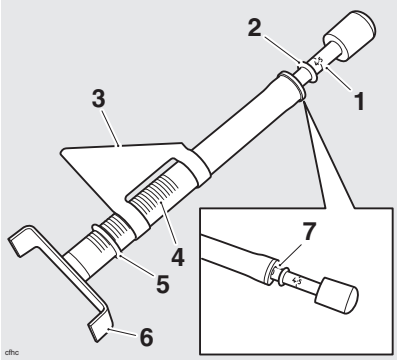

Service Tool T3880126

1. **Load scale - 4.5 kgf (10 lbf) mark**
2. **O-ring**
3. **Deflection slider**
4. **Deflection scale (0.5 mm (0.020 in) increments)**
5. **O-ring**
6. **Belt cradle**
7. **Load scale (zero position)**

Drive belt tension can be measured with the motorcycle on the side stand, or if available, on support stand T3880803 (available from your Triumph dealer). The method of measurement and adjustment is identical, but the belt tension specification for each method is different.

Drive belt tension must be measured with the drive belt cold (at ambient tempertaure).

Drive Belt Tension Specification

Motorcycle on sidestand	5.5 to 7.0 mm (0.20 to 0.27 in)
Motorcycle on Support stand T3880803	7.5 to 9.0 mm (0.30 to 0.35 in)

Drive belt tension is measured by applying a 4.5 kilogram-force (kgf) (10 pound-force (lbf)) load to the plunger on service tool T3880126, once it has been positioned to the lower run of drive belt; this load then deflects the belt. The belt deflection can then be measured using a scale on the tool.

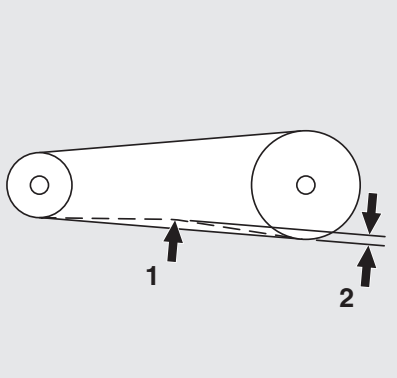

1. **4.5 kilogram-force (10 pound-force) applied to belt**
2. **Amount of deflection**

Measure the drive belt tension as follows:

Note:

- **During the following procedure the exhaust is shown removed for clarity, however it is not necessary to remove the exhaust to check or adjust the drive belt tension.**
  - Slide the small O-ring on tool T3880126 along the tool to the zero position on the load scale.

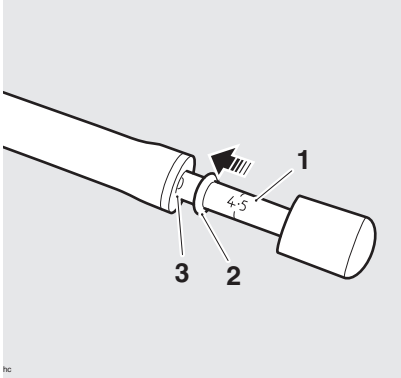

1. **Load scale**
2. **O-ring**
3. **Zero position**

- Push the deflection slider and its O-ring down the tool, so that it will not touch the drive belt lower cover when the tool is positioned to the drive belt. Rotate the deflection slider so that it will contact the lower belt cover when the tool is positioned to the motorcycle.

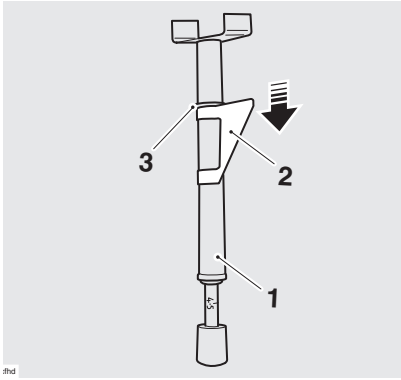

1. **Service tool T3880126**
2. **Deflection slider**
3. **O-ring**

- Gently position the tool's belt cradle to the center of the lower drive belt run, ensuring the deflection slider on the tool body is **NOT** in contact with the drive belt cover at this stage.

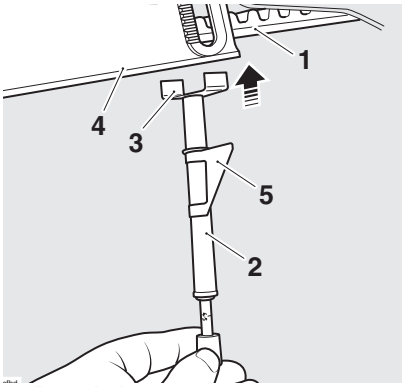

1. **Drive belt**
2. **Service tool T3880126**
3. **Belt cradle**
4. **Drive belt lower cover**
5. **Deflection slider**

- Taking care not to deflect the belt, slide the deflection slider and its O-ring upwards until the slider just touches the belt cover.

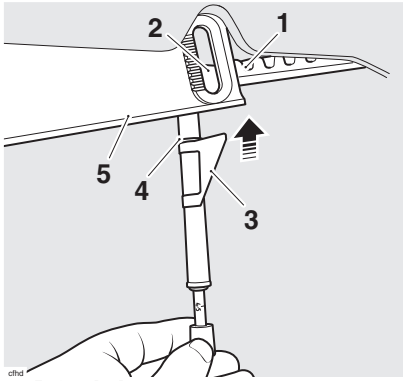

1. **Drive belt**
2. **Belt cradle**
3. **Deflection slider**
4. **O-ring**
5. **Drive belt lower cover**

- Apply force to the belt tension guage in an upwards direction, until the 4.5 kgf (10 lbf) mark on the load scale is reached. The deflection slider must remain stationary against the belt cover while the force is applied.

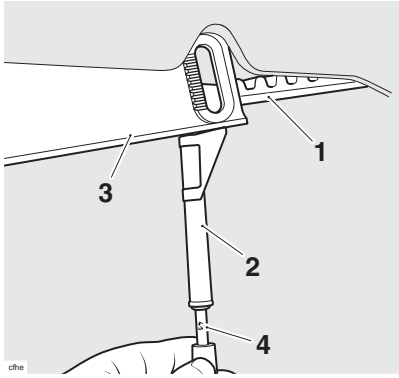

1. **Drive belt**
2. **Scale**
3. **Drive belt lower cover**
4. **Load scale**

- Remove the tool, taking care not to move the O-ring or deflection slider, and read the belt deflection on the scale on the tool. The belt deflection is the gap between the top of deflection slider and the lower edge of the O-ring. The increments on the scale are 0.020 in (0.5 mm) apart.

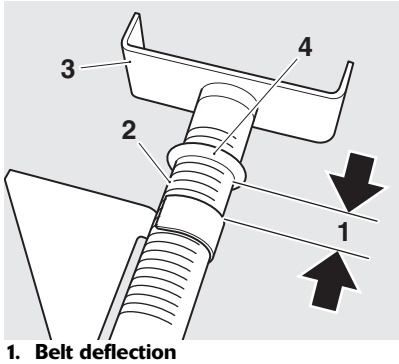

1. **Belt deflection**
2. **Scale**
3. **Deflection slider**
4. **O-ring**

- Repeat the measurement at several points around the drive belt to locate its tightest point. Always adjust drive belt tension at the tightest point in the drive belt.

If the drive belt deflection is outside the limits given below, the drive belt must be adjusted (see page *86*).

Drive Belt Tension Specification	
Motorcycle on sidestand	(0.20 to 0.27 in) 5.5 to 7.0 mm
Motorcycle on Support stand T3880803	(0.30 to 0.35 in) 7.5 to 9.0 mm

Final Drive Belt Tension Adjustment

Note:

- **Always adjust drive belt tension at the tightest point in the drive belt.**
- **Always adjust drive belt tension with the motorcycle engine and drive belt cold.**

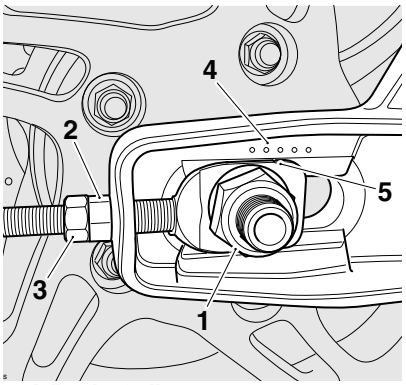

1. **Wheel spindle nut**
2. **Adjuster nut**
3. **Adjuster locknut**
4. **Adjuster markings**
5. **Axle adjuster marking**

- Loosen the wheel spindle nut.
- Release the locknuts on both the left hand and right hand adjusters.
- Moving both adjusters by an equal amount, turn the adjuster nuts clockwise to increase drive belt tension and counter clockwise to decrease drive belt tension.
- When the correct amount of drive belt tension has been set, push the wheel into firm contact with the adjuster. Ensure the axle adjuster marking is aligned with the same adjuster markng on both sides of the swinging arm.
- Tighten both adjuster locknuts to **20 lbf ft (27 Nm)** and the rear wheel spindle nut to **81 lbf ft (110 Nm)**.
- Repeat the drive belt tension check (see page *82*). Re-adjust if necessary.

Warning

Operation of the motorcycle with insecure adjuster locknuts or a loose wheel spindle may result in impaired stability and handling of the motorcycle. This impaired stability and handling may lead to loss of control or an accident.

Tires

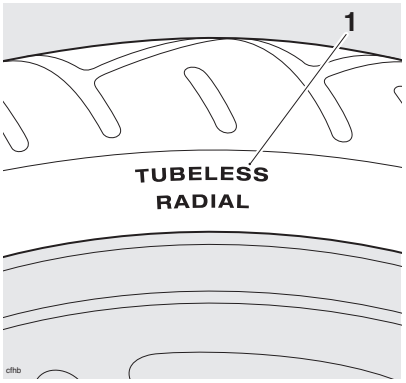

1. **Tire marking**

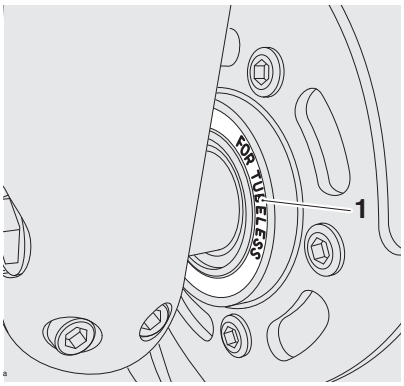

1. **Wheel marking**

This motorcycle is equipped with tubeless tires, valves and wheel rims. Use only tires marked 'TUBELESS' and tubeless valves on rims marked 'SUITABLE FOR TUBELESS TIRES' .

Tire Inflation Pressures

Correct inflation pressure will provide maximum stability, rider comfort and tire life. Always check tire pressures before riding when the tires are cold. Check tire pressures daily and adjust if necessary. See the Specification section for details of the correct inflation pressures.

Warning

Incorrect tire inflation will cause abnormal tread wear and instability problems that may lead to loss of control and an accident.

Under-inflation may result in the tire slipping on, or coming off the rim. Over-inflation will cause instability and accelerated tread wear.

Both conditions are dangerous as they may cause loss of control leading to an accident.

Tire Wear

As the tire tread wears down, the tire becomes more susceptible to punctures and failure. It is estimated that 90% of all tire problems occur during the last 10% of tread life (90% worn). It is therefore not recommended to use tires until they are worn to their minimum.

Minimum Recommended Tread Depth

In accordance with the periodic maintenance chart, measure the depth of the tread with a depth gauge, and replace any tire that has worn to, or beyond the minimum allowable tread depth specified in the table overleaf:

Under 130 km/h (80 mph)	0.08 in (2 mm)
Over 130 km/h (80 mph)	Rear 0.12 in (3 mm) Front 0.08 in (2 mm)

Warning

This motorcycle must not be operated above the legal road speed limit except in authorized closed-course conditions.

Warning

Only operate this Triumph motorcycle at high speed in closed-course on-road competition or on closed-course racetracks. High-speed operation should only then be attempted by riders who have been instructed in the techniques necessary for high-speed riding and are familiar with the motorcycle's characteristics in all conditions. High-speed operation in any other circumstances is dangerous and will lead to loss of motorcycle control and an accident.

Warning

Operation with excessively worn tires is hazardous and will adversely affect traction, stability and handling which may lead to loss of control and an accident.

When tubeless tires become punctured, leakage is often very slow. Always inspect tires very closely for punctures. Check the tires for cuts, embedded nails or other sharp objects. Operation with punctured or damaged tires will adversely affect motorcycle stability and handling which may lead to loss of control or an accident.

Check the rims for dents or deformation. Operation with damaged or defective wheels or tires is dangerous and loss of motorcycle control or an accident could result.

Always consult your authorized Triumph dealer for tire replacement, or for a safety inspection of the tires.

Tire Replacement

All Triumph motorcycles are carefully and extensively tested in a range of riding conditions to ensure that the most effective tire combinations are approved for use on each model. It is essential that approved tires, installed in approved combinations, are used when purchasing replacement tires. The use of non-approved tires, or approved tires in non-approved combinations, may lead to motorcycle instability and an accident. See the specification section for details of approved tire combinations. Always have tires installed and balanced by your authorized Triumph dealer who has the

necessary training and skills to ensure safe, effective fitment.

Warning

On models fitted with ABS, the ABS computer operates by comparing the relative speed of the front and rear wheels. Use of non-recommended tires can affect wheel speed and cause the ABS function not to operate, potentially leading to loss of control and an accident in conditions where the ABS would normally function.

Warning

If a tire sustains a puncture, the tire must be replaced. Failure to replace a punctured tire, or operation with a repaired tire can lead to instability, loss of control or an accident.

Warning

Do not install tube-type tires on tubeless rims. The bead will not seat and the tires could slip on the rims, causing rapid tire deflation that may result in a loss of vehicle control and an accident. Never install an inner tube inside a tubeless tire. This will cause friction inside the tire and the resulting heat build-up may cause the tube to burst resulting in rapid tire deflation, loss of vehicle control and an accident.

Warning

If tire damage is suspected, such as after striking the curb, ask your authorized Triumph dealer to inspect the tire both internally and externally. Remember, tire damage may not always be visible from the outside. Operation of the motorcycle with damaged tires could lead to loss of control and an accident.

Warning

When replacement tires are required, consult your authorized Triumph dealer who will arrange for the tires to be selected, in a correct combination, from the approved list and installed according to the tire manufacturer's instructions.

When tires are replaced, allow time for the tires to seat to the rim (approximately 24 hours). During this seating period, ride cautiously as an incorrectly seated tire could cause loss of control or an accident.

Initially, the new tires will not produce the same handling characteristics as the worn tires and the rider must allow adequate riding distance (approximately 100 miles 160 km)) to become accustomed to the new handling characteristics.

24 hours after fitting, the tire pressures must be checked and adjusted, and the tires examined for correct seating. Rectification must be carried out as necessary.

The same checks and adjustments must also be carried out when 100 miles (160 km) have been travelled after fitting.

Use of a motorcycle with incorrectly seated tires, incorrectly adjusted tire pressures, or when not accustomed to its handling characteristics may lead to loss of control and an accident.

Warning

Tires that have been used on a rolling road dynamometer may become damaged. In some cases, the damage may not be visible on the external surface of the tire. Tires must be replaced after such use as continued use of a damaged tire may lead to instability, loss of control and an accident.

Warning

Accurate wheel balance is necessary for safe, stable handling of the motorcycle. Do not remove or change any wheel balance weights. Incorrect wheel balance may cause instability leading to loss of control and an accident.

When wheel balancing is required, such as after tire replacement, see your authorized Triumph dealer.

Only use self-adhesive weights. Clip on weights may damage the wheel and tire resulting in tire deflation, loss of control and an accident.

Battery

Warning

Under some circumstances, the battery can give off explosive gases; keep sparks, flames and cigarettes away. Provide adequate ventilation when charging or using the battery in an enclosed space.

The battery contains sulphuric acid (battery acid). Contact with skin or eyes may cause severe burns. Wear protective clothing and a face shield.

If battery acid gets on your skin, flush with water immediately.

If battery acid gets in your eyes, flush with water for at least 15 minutes and SEEK MEDICAL ATTENTION IMMEDIATELY.

If battery acid is swallowed, drink large quantities of water and SEEK MEDICAL ATTENTION IMMEDIATELY.

KEEP BATTERY ACID OUT OF THE REACH OF CHILDREN.

Warning

The battery contains harmful materials. Always keep children away from the battery whether or not it is installed in the motorcycle.

Do not attach jump leads to the battery, touch the battery cables together or reverse the polarity of the cables as any of these actions may cause a spark which would ignite battery gases causing a risk of personal injury.

Battery Removal

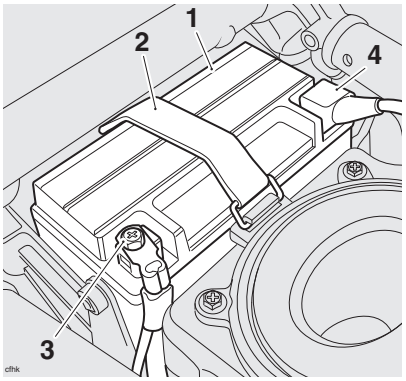

1. **Battery**
2. **Battery strap**
3. **Negative terminal**
4. **Positive terminal (identified with red tape on the lead)**

Remove the rider's seat (see page *37*).

Remove the battery strap.

Disconnect the battery leads, negative (black) lead first.

Take the battery out of the case.

Warning

Ensure that the battery terminals do not touch the motorcycle frame as this may cause a short circuit or spark, which would ignite battery gases causing a risk of personal injury.

Battery Disposal

Should the battery ever require replacement, the original battery must be handed to a recycling agent who will ensure that the dangerous substances from which the battery is manufactured do not pollute the environment.

Battery Maintenance

Clean the battery using a clean, dry cloth. Be sure that the cable connections are clean.

Warning

Battery acid is corrosive and poisonous and will cause damage to unprotected skin. Never swallow battery acid or allow it to come into contact with the skin. To prevent injury, always wear eye and skin protection when handling the battery.

The battery is a sealed type and does not require any maintenance other than checking the Voltage and routine recharging when required, such as during storage (see the following paragraphs).

It is not possible to adjust the battery acid level in the battery; the sealing strip must not be removed.

Battery Discharge

Caution

The charge level in the battery must be maintained to maximise battery life.

Failure to maintain the battery charge level could cause serious internal damage to the battery.

Under normal conditions, the motorcycle charging system will keep the battery fully charged. However, if the motorcycle is unused, the battery will gradually discharge due to a normal process called self discharge; the clock, engine control module (ECM) memory, high ambient temperatures, or the addition of electrical security systems or other electrical accessories will all increase this rate of battery discharge. Disconnecting the battery from the motorcycle during storage will reduce the rate of discharge.

Battery Discharge During Storage and Infrequent Use of the Motorcycle

During storage or infrequent use of the motorcycle, inspect the battery Voltage weekly using a digital multimeter. Follow the manufacturer's instructions supplied with the meter.

Should the battery Voltage fall below 12.7 Volts, the battery should be charged (see page *93*).

Allowing a battery to discharge or leaving it discharged for even a short period of time causes sulphation of the lead plates. Sulphation is a normal part of the chemical reaction inside the battery, however over time the sulphate can crystallise on the plates making recovery difficult or impossible. This permanent damage is not covered by the motorcycle warranty, as it is not due to a manufacturing defect.

Keeping the battery fully charged reduces the likelihood of it freezing in cold conditions. Allowing a battery to freeze will cause serious internal damage to the battery.

Battery Charging

For help with selecting a battery charger, checking the battery Voltage or battery charging, contact your local authorized Triumph dealer.

Warning

The battery gives off explosive gases; keep sparks, flames and cigarettes away. Provide adequate ventilation when charging or using the battery in an enclosed space.

The battery contains sulphuric acid (battery acid). Contact with skin or eyes may cause severe burns. Wear protective clothing and a face shield.

If battery acid gets on your skin, flush with water immediately.

If battery acid gets in your eyes, flush with water for at least 15 minutes and SEEK MEDICAL ATTENTION IMMEDIATELY.

If battery acid is swallowed, drink large quantities of water and SEEK MEDICAL ATTENTION IMMEDIATELY.

KEEP BATTERY ACID OUT OF THE REACH OF CHILDREN.

Caution

Do not use an automotive quick charger as it may overcharge and damage the battery.

Should the battery Voltage fall below 12.7 Volts, the battery should be charged using a Triumph approved battery charger. Always remove the battery from the motorcycle and follow the instructions supplied with the battery charger.

For extended periods of storage (beyond two weeks) the battery should be removed from the motorcycle and kept charged using a Triumph approved maintenance charger.

Similarly, should the battery charge fall to a level where it will not start the motorcycle, remove the battery from the motorcycle before charging.

Battery Installation

Warning

Ensure that the battery terminals do not touch the motorcycle frame as this may cause a short circuit or spark, which would ignite battery gases causing a risk of personal injury.

Place the battery in the battery case.

Reconnect the battery, positive lead (Identified with red tape) first.

Apply a light coat of grease to the terminals to prevent corrosion.

Cover the positive terminal with the protective cap.

Refit the battery strap.

Refit the rider's seat (see page *37*).

Fuse Box

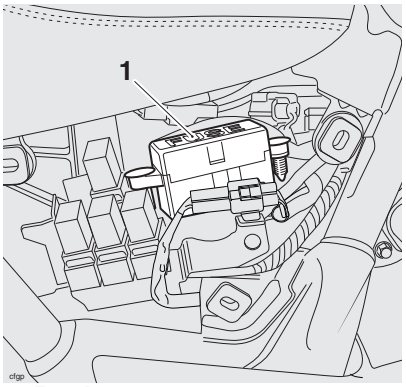

1. Fuse box

The fuse box is located behind the right hand side panel.

To allow access to the fuse box, the right hand side panel must be removed (see page *35*).

Warning

Always replace blown fuses with new ones of the correct rating (as specified on the fuse box cover) and never use a fuse of higher rating. Use of an incorrect fuse could lead to an electrical problem, resulting in motorcycle damage, loss of motorcycle control and an accident.

Fuse Identification

A blown fuse is indicated when all of the systems protected by that fuse become inoperative. When checking for a blown fuse, use the tables below to establish which fuse has blown.

Models without ABS:

Position	Circuit Protected	Rating (Amps)
1	Low and main headlight beams, starter solenoid	15
2	Spare	10
3	Auxiliary lights	5
4	Cooling fan	15
5	Engine management system	20
6	Accessory socket, heated grips	15
7	Alarm, instruments	10
8	Accessory lights, fog lights	10* or 15*
9	Horn, brake Switch	10
10	Ignition, starter circuit	10
11	Main fuse	30
12	Spare	30
* Refer to the label in the fuse box cover		

Note:

- **Numbers shown in the diagram below correspond to the fuse numbers in the table above.**

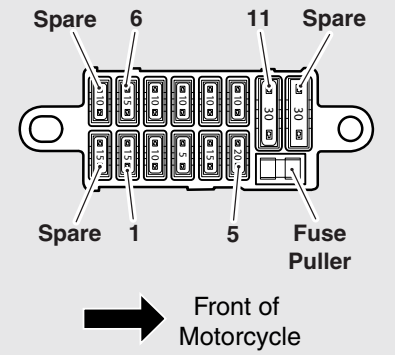

Models fitted with ABS:

Position	Circuit Protected	Rating (Amps)
1	Low and main headlight beams, starter solenoid	15
2	ABS	20
3	Auxiliary lights	5
4	Cooling fan	15
5	Engine management system	20
6	Accessory socket, accessory lights, fog lights	15* or 20*
7	Alarm, instruments, heated grips	10
8	ABS	20
9	Horn, brake Switch	10
10	Ignition, starter circuit	10
11	Main fuse	30
12	Spare	30
* Refer to the label in the fuse box cover		

Note:

- **Numbers shown in the diagram below correspond to the fuse numbers in the table above.**

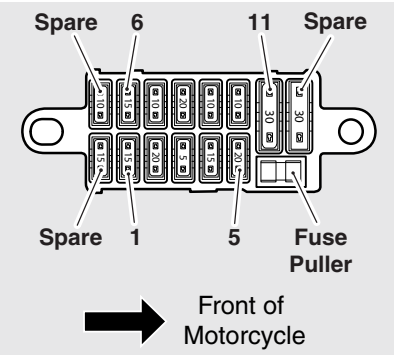

Headlights

Warning

Adjust road speed to suit the visibility and weather conditions in which the motorcycle is being operated.

Ensure that the beam is adjusted to illuminate the road surface sufficiently far ahead without blinding oncoming traffic. An incorrectly adjusted headlight may impair visibility causing an accident.

Warning

Never attempt to adjust a headlamp beam when the motorcycle is in motion.

Any attempt to adjust a headlamp beam when the motorcycle is in motion may result in loss of control and an accident.

Headlight Vertical Adjustment

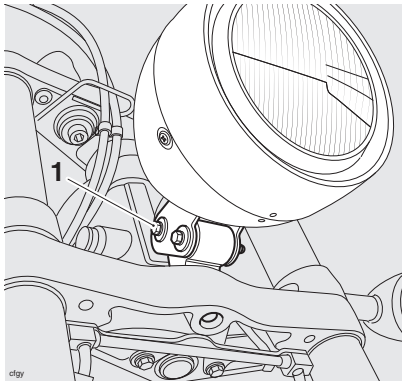

1. **Vertical beam adjuster**

Switch the headlight low beam on.

Remove the adjuster cover.

Loosen the clamp bolt sufficient to allow restricted movement of the headlight.

Adjust the position of the headlight to give the required beam setting.

Tighten the clamp bolt to **80lbf in (9 Nm)**.

Re-check the headlight beam setting.

Switch the headlight off when the beam setting is satisfactorily set.

Headlight Horizontal Adjustment

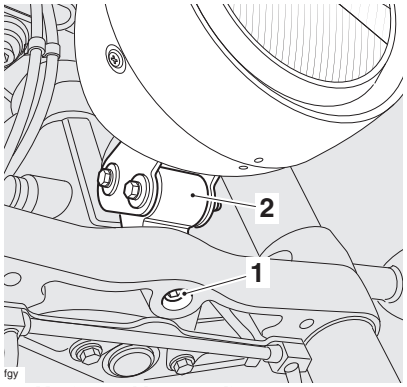

1. **Horizontal beam adjuster**
2. **Headlight mounting bracket**

Switch the headlight low beam on.

Loosen the headlight mounting bracket fixing.

Adjust the horizontal position of the headlight and mounting bracket to give the required beam setting.

Tighten the headlight mounting bracket fixing to **20 lbf ft (27 Nm)**.

Re-check the headlight beam settings.

Switch the headlight off when the beam setting is satisfactorily set.

Headlight Bulb Replacement

It is necessary to remove the headlight from the headlight bowl to gain access to the bulbs.

Warning

The bulbs become hot during use. Always allow sufficient time for the bulbs to cool before handling. Avoid touching the glass part of the bulb. If the glass is touched or gets dirty, clean with alcohol before re-use.

Remove the front seat.

Disconnect the battery, negative (black) lead first.

Undo the fixings securing the headlight clamp to the headlight body.

Support the headlight while removing the clamp.

Remove the headlight from its bowl while supporting it to prevent the cables from being over extended.

Disconnect the multi-pin electrical connector from the headlight bulb and remove the rubber cover.

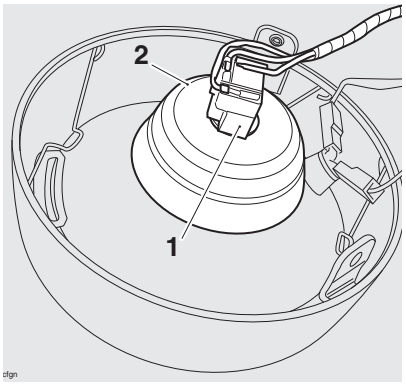

1. **Multi-pin electrical connector**
2. **Rubber cover**

Detach the wire retainer from its clip then remove the bulb from the light unit.

To remove the position light bulb:

Without pulling on the wires, ease the bulb holder from its socket. The bulb is removed from its holder by pulling gently upwards.

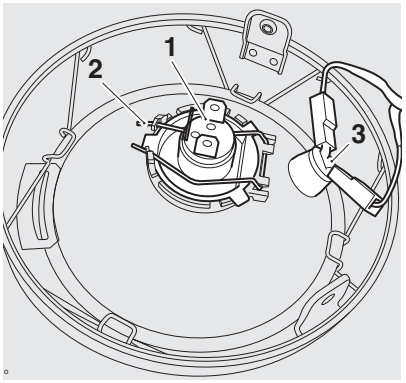

1. **Headlight bulb**
2. **Bulb clip**
3. **Position light bulb**

Installation for both bulbs is the reverse of the removal procedure. Tighten the headlight clamp to **27 lbf in (3 Nm)**.

Caution

When reconnecting the battery, connect the positive (red) lead first.

Warning

Do not reconnect the battery until the assembly process has been completed. Premature battery reconnection could result in ignition of the battery gases causing risk of injury.

Brake/Tail Light

Brake/Tail Light Replacement

The brake/tail light unit is a sealed, maintenance free LED unit.

Turn Signal Lights

Bulb Replacement

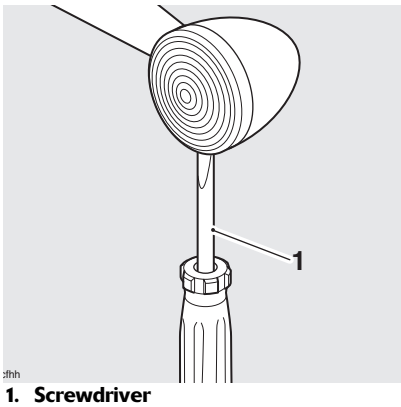

1. **Screwdriver**

Use a flat bladed screwdriver to carefully remove the lens from the indicator to gain access to the bulb for replacement.

To remove the bulb, gently press inwards and twist counter-clockwise.

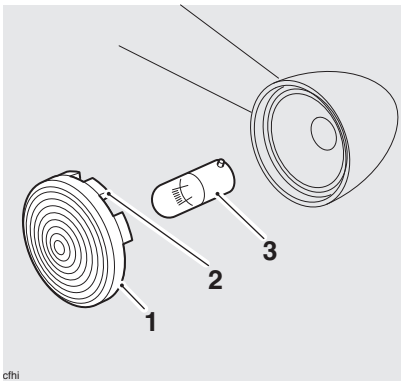

1. **Lens**
2. **Locating tang**
3. **Bulb**

Installation for the bulb is the reverse of the removal procedure, noting the following:

Caution

When installing the lens, ensure that the locating tang is correctly aligned to the indicator body.

To install the indicator lens, align the locating tang with the indicator body and push the lens until the retaining clips secure the lens.

Cleaning

Frequent, regular cleaning is an essential part of the maintenance of your motorcycle. If regularly cleaned, the appearance will be preserved for many years. Cleaning with cold water containing an automotive cleaner is essential at all times but particularly so after exposure to sea breezes, sea water, dusty or muddy roads and in winter when roads are treated for ice and snow. Do not use household detergent, as the use of such products will lead to premature corrosion.

Although, under the terms of your motorcycle warranty, cover is provided against the corrosion of certain items, the owner is expected to observe this reasonable advice which will safeguard against corrosion and enhance the appearance of the motorcycle.

Preparation for Washing

Before washing, precautions must be taken to keep water off the following places.

Rear opening of the exhausts: Cover with a plastic bag secured with rubber bands.

Clutch and brake levers, switch housings on the handlebar: Cover with plastic bags.

Ignition switch and steering lock: Cover the keyhole with tape.

Remove any items of jewellery such as rings, watches, zips or belt buckles, which may scratch or otherwise damage painted or polished surfaces.

Use separate cleaning sponges or cleaning cloths for washing painted/polished surfaces and chassis areas. Chassis areas (such as wheels and under fenders) will be exposed to more abrasive road grime and dust, which may then scratch painted or polished

surfaces, if the same sponge or cleaning cloths are used.

Where to be Careful

Avoid spraying water with any great force near the following places:

- Instruments;
- Brake cylinders and brake calipers;
- Under the fuel tank;
- Steering head bearings.

Caution

Do not spray any water at all under the rider's seat. The rider's seat has the engine's air intake duct fitted to its base and any water sprayed in this area could enter the airbox and engine, causing damage to both items.

Caution

Use of high-pressure spray washers is not recommended. When using pressure washers, water may be forced into bearings and other components causing premature wear from corrosion and loss of lubrication.

Note:

- **Use of soaps that are highly alkaline will leave a residue on painted surfaces, and may also cause water spotting. Always use a low alkaline soap to aid the cleaning process.**

After Washing

Remove the plastic bags and tape, and clear the air intakes.

Lubricate the pivots, bolts and nuts.

Test the brakes before motorcycle operation.

Start the engine and run it for 5 minutes. Ensure adequate ventilation for the exhaust fumes.

Use a dry cloth to absorb water residue. Do not allow water to stand on the machine as this will lead to corrosion.

Warning

Never wax or lubricate the brake discs. Loss of braking power and an accident could result. Clean the disc with a proprietary brand of oil-free brake disc cleaner.

Unpainted Aluminum Items

Items such as brake and clutch levers must be correctly cleaned to preserve their appearance.

Use a proprietary brand of aluminum cleaner which does not contain abrasive or caustic elements.

Clean aluminum items regularly, in particular after use in inclement weather, where the components must be hand washed and dried each time the machine is used.

Warranty claims due to inadequate maintenance will not be allowed.

Cleaning of the Exhaust System

All parts of the exhaust system of your motorcycle must be cleaned regularly to avoid a deterioration of its appearance. These instructions can be applied to chrome, brushed stainless steel and carbon fiber components alike.

Note:

- **The exhaust system must be cool before washing to prevent water spotting.**

Washing

Prepare a mixture of cold water and mild automotive cleaner. Do not use a highly alkaline soap as commonly found at commercial car washes because it leaves a residue.

Wash the exhaust system with a soft cloth. Do not use an abrasive scouring pad or steel wool. They will damage the finish.

Rinse the exhaust system thoroughly.

Ensure no soap or water enters the exhausts.

Drying

Dry the exhaust system as far as possible with a soft cloth. Do not run the engine to dry the system or spotting will occur.

Protecting

When the exhaust system is dry, rub 'Motorex 645 Clean and Protect' into the surface.

Caution

The use of products containing silicone will cause discoloration of the chrome and must not be used. Similarly, the use of abrasive cleaners will damage the system and must not be used.

It is recommended that regular protection be applied to the system as this will both protect and enhance the system's appearance.

This page intentionally left blank

STORAGE

Preparation for Storage

Clean and dry the entire vehicle thoroughly.

Fill the fuel tank with the correct grade of unleaded fuel and add a suitable fuel stabilizer (if available), following the fuel stabilizer manufacturer's instructions.

Warning

Gasoline is extremely flammable and can be explosive under certain conditions. Turn the ignition switch OFF. Do not smoke. Make sure the area is well ventilated and free from any source of flame or sparks; this includes any appliance with a pilot light.

Remove one of the spark plugs from each cylinder and put several drops 0.16 fl oz (5 ml) of engine oil into each cylinder. Cover the spark plug holes with a piece of cloth or rag. With the engine stop switch in the RUN position, push the starter button for a few seconds to coat the cylinder walls with oil. Install the spark plugs, tightening to **15 lbf ft (20 Nm)**.

Change the engine oil and filter (see page *64*).

Check and if necessary correct the tire pressures (see page *87*).

Set the motorcycle on a stand so that both wheels are raised off the ground. (If this cannot be done, put boards under the front and rear wheels to keep dampness away from the tires.)

Spray rust inhibiting oil (there are a host of products on the market and your dealer will be able to offer you local advice) on all unpainted metal surfaces to prevent rusting. Prevent oil from getting on rubber parts, brake discs or in the brake calipers.

Make sure the cooling system is filled with a 50% mixture of coolant (noting that HD4X Hybrid OAT coolant, as supplied by Triumph, is pre-mixed and requires no dilution) and distilled water solution (see page *66*).

Remove the battery, and store it where it will not be exposed to direct sunlight, moisture, or freezing temperatures. During storage it should be given a slow charge (one ampere or less) about once every two weeks (see page *91*).

Store the motorcycle in a cool, dry area, away from sunlight, and with a minimum daily temperature variation.

Put a suitable porous cover over the motorcycle to keep dust and dirt from collecting on it. Avoid using plastic or similar non-breathable, coated materials that restrict air flow and allow heat and moisture to accumulate.

Preparation after Storage

Install the battery (if removed) (see page *93*).

If the motorcycle has been stored for more than four months, change the engine oil (see page *64*).

Check all the points listed in the Daily Safety Checks section.

Before starting the engine, remove the spark plugs from each cylinder.

Put the side stand down.

Crank the engine on the starter motor several times until the oil pressure light goes out.

Replace the spark plugs, tightening to **15 lbf ft (20 Nm)**, and start the engine.

Check and if necessary correct the tire pressures (see page *87*).

Check and if necessary adjust the drive belt tension (see page *81*).

Clean the entire vehicle thoroughly.

Check the brakes for correct operation.

Test ride the motorcycle at low speeds.

SPECIFICATIONS

Specifications - Thunderbird

Dimensions

Dimensions

Overall Length	92.1 in (2340 mm)
Overall Width	34.6 in (880 mm)
Overall Height	44.1 in (1120 mm)
Wheelbase	63.6 in (1615 mm)
Seat Height	27.5 in (700 mm)
Weights	
Dry Weight	679 lb (308 kg)
Maximum Payload	509 lb (231 kg)

Specifications

Engine

Type	Liquid cooled parallel twin, 270° firing angle
Displacement	97.4 cu in (1596 cc)
Bore x Stroke	4.08 x 3.71 in (103.8 x 94.3 mm)
Compression Ratio	9.7:1
Cylinder Sequence	Left to right
Firing Order	1-2

Performance

Maximum Power (DIN)	84.8 hp at 4,850 rpm (86 PS at 4,850 rpm)
Maximum Torque	107.7 lb ft at 2,750 rpm (146.1 Nm at 2,750 rpm)

Lubrication

Lubrication System	Wet sump
Engine Oil Capacities	
dry fill	1.58 US gal (6.0 litres)
oil/filter change	1.11 US gal (4.2 litres)
oil change only	1.05 US gal (4.0 litres)

Cooling

Coolant Type	Triumph HD4X Hybrid OAT coolant
Water/coolant ratio	50/50 (pre-mixed as supplied by Triumph)
Coolant Capacity	0.67 US gal (2.55 litres)
Thermostat Opens (nominal)	179°F (82°C)

Fuel System

Type	Sequential electronic fuel injection
Fuel Pump	Submerged electric
Fuel Pressure	50.7 psi (3.5 bar)

Fuel

Type	87 RON/MON (91 RON) unleaded
Tank Capacity	5.73 US gal (21.7 litres)

Ignition

Ignition System	Digital electronic
Spark Plug	NGK DPR6EA-9, 2 per cylinder
Gap	0.035 in (0.9 mm)

Transmission

Transmission Type	6 speed, constant mesh with transmission damper
Clutch Type	Wet, multi-plate
Final Drive	Toothed belt
Primary Drive Ratio	1.440:1 (85/59)
Gear Ratio:	
1st	2.875:1 (46/16)
2nd	1.958:1 (47/24)
3rd	1.536:1 (43/28)
4th	1.219:1 (39/32)
5th	1.029:1 (35/34)
6th	0.909:1 (30/33)
Final Drive Ratio	2.214:1 (62/28)

Tires

Tire Pressures (Cold)

Front	36 lb/in^2 (2.48 bar)
Rear	38 lb/in^2 (2.62 bar)

Approved Tires

Option 1

Front	Metzeler ME880 Marathon 120/70ZR19
Rear	Metzeler ME880 Marathon 200/50ZR17

Option 2

Front	Dunlop D208 F 120/70ZR19
Rear	Dunlop D208 200/50ZR17

Warning

Use the recommended tires ONLY in the combinations given. Do not mix tires from different manufacturers or mix different specification tires from the same manufacturers as this may result in loss of motorcycle control and an accident.

Electrical Equipment

Battery	12 Volt, 18 Ah
Alternator	42 Amps at 2,000 rpm
	45 Amps at 6,000 rpm
Headlight	12 Volt, 60/55 watt H4 halogen
Tail/Brake Light	LED
Turn Signal Lights	12 Volt, 10 Watt

Frame	
Rake	31.2°
Trail	5.94 in (151 mm)
Tightening Torques	
Oil Filter	7 lbf ft (10 Nm)
Sump Plug	18 lbf ft (25 Nm)
Spark Plug	15 lbf ft (20 Nm)
Fluids and Lubricants	
Engine Oil	Semi or fully synthetic 10W/40 or 15W/50 motorcycle engine oil which meets specification API SH (or higher) and JASO MA, such as Mobil 1 Racing 4T
Brake and Clutch Fluid	Mobil Universal Brake & Clutch Fluid DOT 4
Coolant	Triumph HD4X Hybrid OAT coolant (pre-mixed)
Bearings and Pivots	Mobil Grease HP 222

Index

B

Battery 91
- Disposal 92
- Installation 93
- Maintenance 92
- Removal 91

Brake/Tail Light 98
Brakes 73
- Brake Wear Inspection 73
- Braking 45
- Disc Brake Fluid 74
- Fluid Inspection and Adjustment . . . 75
- Light Switches 76
- Pad Wear Compensation 73

C

Cleaning 99
- After Washing 100
- Drying 101
- Exhaust System 101
- Preparation for Washing 99
- Protecting 101
- Unpainted Aluminum Items 100
- Washing 101
- Where to be Careful 100

Clutch 72
- Adjustment 72
- Inspection 72

Cooling 107
Cooling System 66
- Coolant Change 68
- Corrosion Inhibitors 66
- Level Adjustment 67
- Level Inspection 67
- Radiator Hoses 68

D

Dimensions 105

E

Electrical Equipment 109
Engine
- Serial Number 17
- Specifications 106
- To Start the Engine 42
- To Stop the Engine 42

Engine Oil 63
- Disposal of Oil and Filters 65
- Level Inspection 63
- Oil and Oil Filter Change 64
- Specification and Grade 65

F

Final Drive Belt 81
- Tension Adjustment 86
- Tension Inspection 82

Fluids and Lubricants 110
Fog Light Switch 31
Frame 110
Fuel 107
Fuel Gauge 23
Fuel Requirement 31
- Filling the Fuel Tank 34
- Fuel Grade 31
- Fuel Tank Cap 33
- Refuelling 31

Fuel System 107
Fuse Box 94
- Fuse Identification 94

G

Gears
- Changing 44

H

Headlights 95
- Bulb Replacement 97
- Horizontal Adjustment 96
- Vertical Adjustment 96

High Speed Operation 49

I

Ignition 107
- Ignition Switch 26
- Ignition Switch Location 26
- Ignition Switch Operation 27
- Key 26
- Steering Lock 28
- Steering Lock Key 28

Instrument Panel Layout 21

L

Left Handlebar Switches 30
- Headlight Dim Switch 30
- Horn Button 31
- Turn Signal Switch 31

Lubrication 106

M

Moving Off 43

O

Odometer/Trip Meter 22

P

Parking 48
Performance 106
Pillion Seat Removal 38

R

Rider Seat Removal 37
Right Handlebar Switches 29
- Engine Stop Switch 29
- Starter Button 30

S

Safe Operation 40
- Daily Safety Checks 40

Safety First 6
- Fuel and Exhaust Fumes 6
- Handlebars and Footrests 11
- Helmet and Clothing 7
- Maintenance and Equipment 9
- Parking 8
- Parts and Accessories 8
- Riding 10
- The Motorcycle 6

Scheduled Maintenance 60
Seat Care 37
Seats 37
Side Panels 35
Side Stand 35
Specifications 105
Speedometer 22
Steering/Wheel Bearings 78
- Inspecting for Free-Play 78
- Steering Inspection 78
- Wheel Bearings Inspection 79

Storage 103
- Preparation after Storage 104
- Preparation for Storage 103

Suspension 80
- Adjustment 80
- Suggested Settings 81

T

Tachometer 22
Throttle Control 69
    Inspection 70
Tightening Torques 110
Tires
    Minimum Tread Depth 87
    Replacement 88
    Tire Inflation Pressures 87
    Tire Wear 87
Toolkit and Handbook 36
Transmission 108
Turn Signal Lights 98
    Bulb Replacement 98
Tyres 87

V

Vehicle Identification Number 17

W

Warnings 1
    Information 4
    Maintenance 2
    Noise Control System 3
    Owner's Handbook 3
    Warning Label Locations 12, 13
    Warning Labels 2
    Warning Lights 24
    Warnings, Cautions and Notes 1
Weights 105
Windshield Cleaning 77

This page intentionally left blank