TRIUMPH

Speed 400, Scrambler 400 X, Scrambler 400 XC, Thruxton 400 and Tracker 400

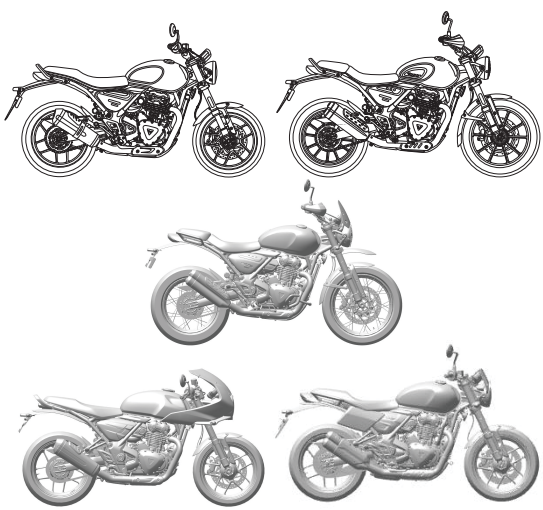

This handbook contains information on the Triumph Speed 400, Scrambler 400 X, Scrambler 400 XC, Thruxton 400 and Tracker 400 motorcycles. Always store this Owner's Handbook with the motorcycle and refer to it for information whenever necessary.

The information contained in this publication is based on the latest information available at the time of printing. Triumph reserves the right to make changes at any time without prior notice, or obligation.

Not to be reproduced wholly or in part without the written permission of Triumph Motorcycles Limited.

© Copyright 12.2025 Triumph Motorcycles Limited, Hinckley, Leicestershire, England.

Publication part number 3850838-EN issue 1

CONTENTS

This handbook contains a number of different sections. The table of contents below will help you find the beginning of each section where, in the case of the major sections, a further table of contents will help you find the specific subject required.

03 FOREWORD

09 SAFETY FIRST

18 WARNING LABELS

20 PARTS IDENTIFICATION

33 SERIAL NUMBERS

35 INSTRUMENTS

55 GENERAL INFORMATION

93 HOW TO RIDE THE MOTORCYCLE

105 ACCESSORIES, LOADING AND PASSENGERS

111 MAINTENANCE AND ADJUSTMENT

179 CLEANING AND STORAGE

191 WARRANTY

197 SPECIFICATIONS

223 INDEX

228 APPROVAL INFORMATION

Owner's Handbook

⚠ WARNING

The Owner's Handbook or Quick Start Guide (where supplied with the motorcycle), and all other documents that are supplied with your motorcycle, should be considered a permanent part of your motorcycle and should remain with it, even if your motorcycle is subsequently sold.

All riders must read the Owner's Handbook, Quick Start Guide, and all other documents supplied with your motorcycle before riding, in order to become thoroughly familiar with the correct operation of your motorcycle's controls, its features, capabilities and limitations.

Do not lend your motorcycle to others as riding when not familiar with your motorcycle's controls, features, capabilities and limitations may lead to loss of motorcycle control, which could result in serious injury or death.

Thank you for choosing a Triumph motorcycle. This motorcycle is the product of Triumph's use of proven engineering, exhaustive testing, and continuous striving for superior reliability, safety and performance.

Please read this Owner's Handbook before riding in order to become thoroughly familiar with the correct operation of your motorcycle's controls, its features, capabilities and limitations.

This Owner's Handbook includes safe riding tips, but does not contain all the techniques and skills necessary to ride a motorcycle safely.

Triumph strongly recommends that all riders undertake the necessary training to ensure safe operation of this motorcycle.

The latest version of this Owner's Handbook containing any changes is available from your local dealer and online from www.triumphtechnicalinformation.com/handbooks in:

- English
- US English
- Arabic
- Chinese
- Dutch
- French
- German
- Italian
- Japanese
- Portuguese (Brazil)
- Spanish
- Swedish
- Thai
- Finnish, Polish, Portuguese and Slovak (available online only from www.triumphtechnicalinformation.com/handbooks).

The languages available for this Owner's Handbook are dependent on the specific motorcycle model and country.

QR Code

To download the Owner's Handbook;

Enter the address below into a web browser:

www.triumphtechnicalinformation.com/handbooks

Or;

Scan the QR code using your smart device:

This QR code can also be found on a label permanently attached to your motorcycle, located either under the seat or behind the side panel.

After entering the web address or scanning the QR code, your browser will be directed to a web page where you can select and download your Owner's Handbook.

We recommend that you download and store a copy of the Owner's Handbook for use offline. As information contained within the handbook may change, we recommend downloading and replacing your handbook on a regular basis to make sure it is kept up to date.

Triumph Technical Information (TTI)

For maintenance procedures that require specialist knowledge or service tools, these are referred to the Service Manual which can be accessed at www.triumphtechnicalinformation.com.

Or;

Scan the QR code using your smart device:

Registration is required to access the site.

Dangers, Warnings, Cautions and Notices

Particularly important information is presented in the following form:

⚠ DANGER

This danger symbol identifies special instructions or procedures, which, if not correctly followed, will result in serious injury, or death.

⚠ WARNING

This warning symbol identifies special instructions or procedures, which, if not correctly followed, could result in serious injury, or death.

⚠ CAUTION

This caution symbol identifies special instructions or procedures, which, if not strictly observed, could result in minor or moderate injury.

NOTICE

This notice symbol indicates points of particular interest for more efficient and convenient operation.

Warning Labels



At certain areas of the motorcycle, the symbol above can be seen. The symbol means CAUTION: REFER TO THE HANDBOOK and will be followed by a pictorial representation of the subject concerned and/or text.

Never attempt to ride the motorcycle or make any adjustments without reference to the relevant instructions contained in this handbook.

For the location of all labels showing this symbol, see the Warning Label Locations section of this Owner's Handbook. Where necessary, this symbol will also appear on the pages containing the relevant information.

Maintenance

To ensure a long, safe, and trouble-free life for your motorcycle, maintenance should only be carried out by a competent person with the specialist knowledge and technical understanding of motorcycles, such as an authorised Triumph dealer.

An authorised Triumph dealer will have the necessary knowledge, equipment, and skills to maintain your Triumph motorcycle correctly.

To locate your nearest authorised Triumph dealer, visit the Triumph web site at www.triumphmotorcycles.co.uk/dealers or telephone the authorised distributor in your country. Their address is given in the service record book that accompanies this handbook.

Noise Control System

Tampering with the noise control system is prohibited.

Owners are warned that the law may prohibit:

- The removal or rendering inoperative by any person other than for purposes of maintenance, repair or replacement, of any device or element of design incorporated into any new vehicle for the purpose of noise control prior to its sale or delivery to the ultimate purchaser or while it is in use and,
- The use of the vehicle after such device or element of design has been removed or rendered inoperative by any person.

Among those acts presumed to constitute tampering are the acts listed below:

- Removal of, or puncturing the muffler, baffles, header pipes or any other component that conducts exhaust gases.
- Removal of, or puncturing of any part of the intake system.
- Lack of proper maintenance.
- Replacing any moving parts of the vehicle, or parts of the exhaust or intake system, with parts other than those specified by the manufacturer.

Relocating the Motorcycle

Rules and regulations vary between countries. Therefore, when moving countries and relocating your Triumph motorcycle, it is your responsibility to make sure that the motorcycle meets local rules and regulations.

Talk to Triumph

Our relationship with you does not end with the purchase of your Triumph. Your feedback on the buying and ownership experience is very important in helping us develop our products and services for you.

Please help us by ensuring your authorised Triumph dealership has your email address and registers this with us. You will then receive an online customer satisfaction survey invitation to your email address where you can give us this feedback.

Your Triumph Team.

Off-road Use

Scrambler 400 X and Scrambler 400 XC Only

This motorcycle is designed for on-road and light off-road use. Light off-road use includes use on unpaved, dirt or gravel roads, but does not include riding on any motocross course, any off-road competition (such as motocross or enduro riding), or riding off-road with a passenger.

Light off-road use does not include jumping the motorcycle or riding over obstacles. Do not attempt to jump over any bumps or obstacles. Do not attempt to ride over any obstacles.

This page intentionally left blank

The Motorcycle

Speed 400, Thruxton 400 and Tracker 400

⚠ WARNING

This motorcycle is designed for on-road use only.

Do not ride this motorcycle off-road.

Off-road operation may lead to loss of motorcycle control which could result in serious injury or death.

Scrambler 400 X and Scrambler 400 XC

⚠ WARNING

This motorcycle is designed for on-road and light off-road use. Light off-road use includes use on unpaved, dirt or gravel roads, but does not include riding on any motocross course, any off-road competition (such as motocross or enduro riding), or riding off-road with a passenger.

Light off-road use does not include jumping the motorcycle or riding over obstacles. Do not attempt to jump over any bumps or obstacles. Do not attempt to ride over any obstacles.

Extreme off-road use may lead to loss of motorcycle control, which could result in serious injury or death.

All Models

⚠ WARNING

This motorcycle is designed for use as a two-wheeled vehicle capable of carrying a rider and up to one passenger (subject to a passenger seat and footrests being fitted).

The total weight of the rider, and any passenger, accessories and luggage must not exceed the maximum load limit as specified in the Specifications section.

Failure to follow the advice above may lead to loss of motorcycle control, which could result in serious injury or death.

⚠ WARNING

This motorcycle is fitted with a catalytic converter, which along with the exhaust system, reaches a very high temperature during engine operation.

Flammable materials such as grass, hay/straw, leaves, clothing and luggage, could ignite if allowed to come into contact with any part of the exhaust system and catalytic converter.

Always make sure flammable materials do not come into contact with the exhaust system or catalytic converter.

Failure to follow the advice above may cause a fire, which could result in serious injury or death.

⚠ WARNING

This motorcycle is not designed to tow a trailer or be fitted with a sidecar.

Fitting a sidecar and/or a trailer may affect the handling, stability or other aspects of the motorcycle operation.

Failure to follow the advice above may lead to loss of motorcycle control, which could result in serious injury or death.

Scrambler 400 XC Only

⚠ WARNING

Riding the motorcycle off-road may result in loosening of the wheel spokes.

Make sure that the spokes are checked before and after riding the motorcycle off-road. Contact a competent person with the specialist knowledge and technical understanding of motorcycles, such as an authorised Triumph dealer.

Spokes that are loose may affect handling and stability leading to loss of motorcycle control, which could result in serious injury or death.

⚠ WARNING

Check the wheel rims and spokes regularly for wear and damage.

Check spoke tension at all intervals listed in the maintenance schedule. Contact a competent person with the specialist knowledge and technical understanding of motorcycles, such as an authorised Triumph dealer to tighten any loose spokes.

Incorrectly tightened spokes may affect handling and stability, leading to loss of motorcycle control, which could result in serious injury or death.

All Models

NOTICE

Riding the motorcycle in extreme conditions, such as on wet and muddy roads, rough terrain or in dusty and humid environments, may lead to above average wear and damage of certain components.

Therefore the servicing and replacement of worn or damaged components may be necessary before the scheduled maintenance service is reached.

It is important that the motorcycle is inspected after riding in extreme conditions and any worn or damaged components are serviced or replaced.

Fuel and Exhaust Fumes

⚠ DANGER

Never start the engine or run the engine in a confined area.

Always operate the motorcycle in the open air or in an area with adequate ventilation.

Exhaust fumes are poisonous and will cause loss of consciousness and death within a short period of time.

⚠ WARNING

PETROL IS HIGHLY FLAMMABLE:

- Always turn off the engine when refuelling.

- Pay full attention and remain alert while refuelling.

- Do not refuel or open the fuel filler cap while smoking or in the vicinity of any open (naked) flame.

- Take care not to spill any petrol on the engine, exhaust pipes or silencers when refuelling.

- If petrol is swallowed, inhaled or allowed to get into the eyes, seek immediate medical attention.

- Spillage on the skin should be immediately washed off with soap and water and clothing contaminated with petrol should immediately be removed.

- Burns and other serious skin conditions may result from contact with petrol.

Failure to follow the advice above could result in serious injury or death.

Helmet and Clothing



⚠ DANGER

A helmet is one of the most important pieces of riding gear as it offers protection against head injuries. You and your passenger's helmet should be carefully chosen and should fit you or your passenger's head comfortably and securely. A brightly coloured helmet will increase a rider's (or passenger's) visibility to other operators of road vehicles.

An open face helmet offers some protection in an accident, though a full face helmet will offer more.

Always wear a visor or approved goggles to help vision and to protect your eyes.

Failure to follow the advice above will result in serious injury or death.

⚠ WARNING

When riding the motorcycle, both rider and passenger (on models where carrying a passenger is permitted) must always wear appropriate clothing including a motorcycle helmet, eye protection, gloves, boots, trousers (close fitting around the knee and ankle) and a brightly coloured jacket.

During off-road use (on models suitable for off-road use), the rider must always wear appropriate clothing including trousers and boots.

Brightly coloured clothing will considerably increase a rider's (or passenger's) visibility to other operators of road vehicles.

Although full protection is not possible, wearing correct protective clothing can reduce the risk of serious injury or death.

Maintenance and Equipment

⚠ WARNING

Whenever there is doubt as to the correct or safe operation of this motorcycle, contact a competent person with the specialist knowledge and technical understanding of motorcycles, such as an authorised Triumph dealer.

Operation of an incorrectly performing motorcycle may aggravate a fault and may also compromise safety.

Continued operation of an incorrectly performing motorcycle may affect the handling, stability or other aspects of the motorcycle operation, leading to loss of motorcycle control, which could result in serious injury or death.

⚠ WARNING

Make sure all equipment that is required by law is installed and functioning correctly.

The removal or alteration of the motorcycle's lights, silencers, emission or noise control systems can violate the law.

Incorrect or improper modification may affect the handling, stability or other aspects of the motorcycle's operation, leading to loss of motorcycle control, which could result in serious injury or death.

⚠ WARNING

If the motorcycle is involved in an accident, collision or fall, it must be taken for inspection and repair.

Inspections and repairs must be completed by a competent person with the specialist knowledge and technical understanding of motorcycles, such as an authorised Triumph dealer.

Any accident can cause damage to the motorcycle that, if not correctly repaired, may cause a second accident, which could result in serious injury or death.

Parking

⚠ WARNING

Always switch off the engine and remove the ignition key before leaving the motorcycle unattended. By removing the key, the risk of use of the motorcycle by unauthorised or untrained persons is reduced.

When parking the motorcycle, always remember the following:

- Engage first gear to help prevent the motorcycle from rolling off the stand.

- The engine, radiator, exhaust system, rear suspension unit and brakes will be hot after riding. DO NOT park where pedestrians, animals and/or children are likely to touch the motorcycle.

- Do not park on soft ground or on a steeply inclined surface. Parking under these conditions may cause the motorcycle to fall over.

For further details, refer to the How to Ride the Motorcycle section of this Owner's Handbook.

Failure to follow the advice above could result in damage to property, serious injury or death.

Riding

⚠ DANGER

Never ride the motorcycle when fatigued or under the influence of alcohol or other drugs.

Riding when under the influence of alcohol or other drugs is illegal.

Riding when fatigued or under the influence of alcohol or other drugs reduces the rider's ability to maintain control, leading to loss of motorcycle control, which will result in serious injury or death.

⚠ WARNING

All riders must be licenced to operate the motorcycle.

Operation of the motorcycle without a licence is illegal and could lead to prosecution.

Operation of the motorcycle without formal training in the correct riding techniques that are necessary to become licenced is dangerous.

Failure to follow the advice above may lead to loss of motorcycle control, which could result in serious injury or death.

⚠ WARNING

Always ride defensively and wear the protective equipment mentioned elsewhere in this Safety First section.

Remember, in an accident, a motorcycle does not give the same impact protection as a car.

Failure to follow the advice above could result in serious injury or death.

⚠ WARNING

This motorcycle should be operated within the legal speed limits for the particular road travelled.

Riding a motorcycle at high speeds can be dangerous since the time available to react to a hazard is greatly reduced at high speeds.

Always reduce speed in potentially hazardous driving conditions, such as bad weather or heavy traffic.

Failure to follow the advice above may lead to loss of motorcycle control, which could result in serious injury or death.

⚠ WARNING

Continually observe and react to changes in road surface, traffic and wind conditions. All two-wheeled vehicles are subject to external forces, which may affect the handling, stability or other aspects of the motorcycle's operation.

These forces include but are not limited to:

- Wind draft from passing vehicles

- Potholes, uneven or damaged road surfaces

- Bad weather

- Rider error.

Always operate the motorcycle at moderate speed and away from heavy traffic until you have become thoroughly familiar with its handling and operating characteristics. Never exceed the legal speed limit.

Failure to follow the advice above may lead to loss of motorcycle control, which could result in serious injury or death.

Handlebars and Footrests

⚠ WARNING

The rider must maintain control of the motorcycle by keeping hands on the handlebars at all times.

The handling and stability of a motorcycle will be affected if the rider removes their hands from the handlebars.

Failure to follow the advice above may lead to loss of motorcycle control, which could result in serious injury or death.

⚠ WARNING

The rider and passenger (if applicable) must always use the footrests provided, during operation of the motorcycle.

By using the footrests, both rider and passenger will reduce the risk of inadvertent contact with any motorcycle components and will also reduce the risk of injury from entrapment of clothing.

Failure to follow the advice above may lead to loss of motorcycle control, which could result in serious injury or death.

⚠ WARNING

Always make sure that the passenger footrests are fully extended when carrying a passenger.

Never carry a passenger without them using the fully extended passenger footrests.

Incorrect foot placement anywhere on the motorcycle instead of using the footrests may cause:

- The passenger's feet or clothing to become trapped

- The passenger to be in contact with hot exhaust pipes.

Failure to follow the advice above may lead to loss of motorcycle control, which could result in damage to property, serious injury or death.

⚠ WARNING

The bank angle indicators must not be used as a guide to how far the motorcycle may be safely banked.

This depends on many various conditions including, but not limited to:

- Road surface

- Tyre condition

- Weather.

Banking to an unsafe angle may lead to loss of motorcycle control, which could result in serious injury or death.

⚠ WARNING

Always replace the bank angle indicators before they are worn to their maximum limit.

Use of a motorcycle with bank angle indicators worn beyond the maximum limit will allow the motorcycle to be banked to an unsafe angle.

Banking to an unsafe angle may lead to loss of motorcycle control which could result in serious injury or death.

⚠ WARNING

When banking and the bank angle indicator, attached to the rider's footrest, makes contact with the ground, the motorcycle is nearing its bank angle limit.

A further increase of the banking angle is unsafe.

Banking to an unsafe angle may lead to loss of motorcycle control which could result in serious injury or death.

Parts and Accessories

⚠ WARNING

Owners should be aware that the only approved parts, accessories and conversions for any Triumph motorcycle are those that carry official Triumph approval.

We recommend accessories and conversions be completed by a competent person with the specialist knowledge and technical understanding of motorcycles, such as an authorised Triumph dealer.

In particular, it is extremely hazardous to fit or replace parts or accessories whose fitting requires the dismantling of, or addition to, either the electrical or fuel systems. Any such modification could cause a safety hazard.

The fitting of any non-approved parts, accessories or conversions may affect the handling, stability or other aspects of the motorcycle's operation, leading to loss of motorcycle control, which could result in serious injury or death.

Triumph does not accept any liability whatsoever for defects caused by the fitting of non-approved parts, accessories or conversions.

Triumph does not accept any liability whatsoever for defects caused by the incorrect fitment of approved parts, accessories or conversions.

WARNING LABELS

All Models

Speed 400 shown

Left Hand Side

NOTICE

The labels detailed on this and the following pages draw your attention to important safety information in this handbook. Before riding, make sure that you have understood and complied with all the information to which these labels relate.

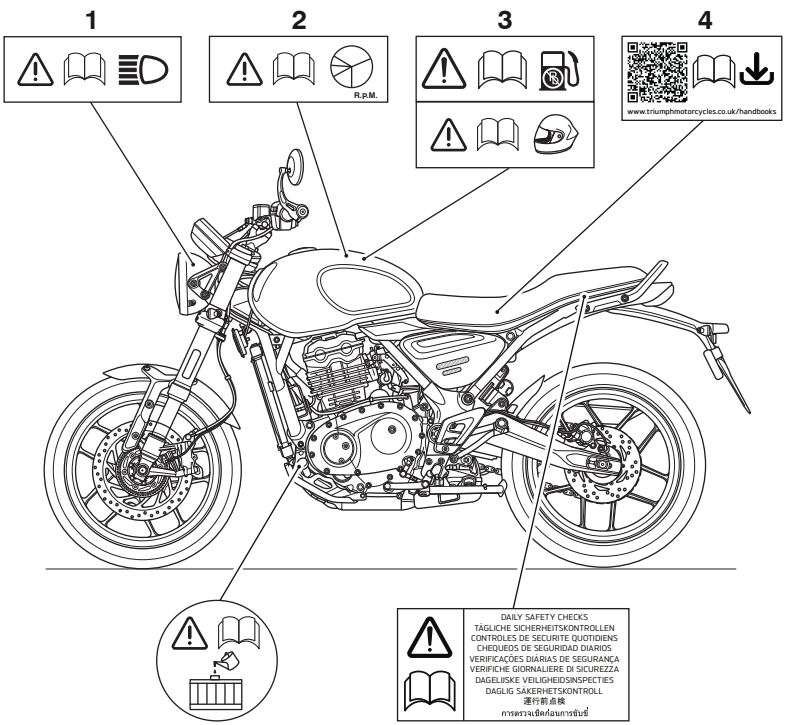

1. **Headlight (page 172)**
2. **Running-In (page 89)**
3. **Unleaded Fuel (page 62) and Helmet (page 11)**
4. **Owner's Handbook Download Details (under seat)**
5. **Daily Safety Checks (page 90)**
6. **Coolant - Expansion Tank Cap (page 126)**

Right Hand Side

NOTICE
All warning labels and decals, with the exception of the Running-in label, are fitted to the motorcycle using a strong adhesive. In some cases, labels are installed prior to an application of paint lacquer. Therefore, any attempt to remove the warning labels will cause damage to the paintwork or bodywork.

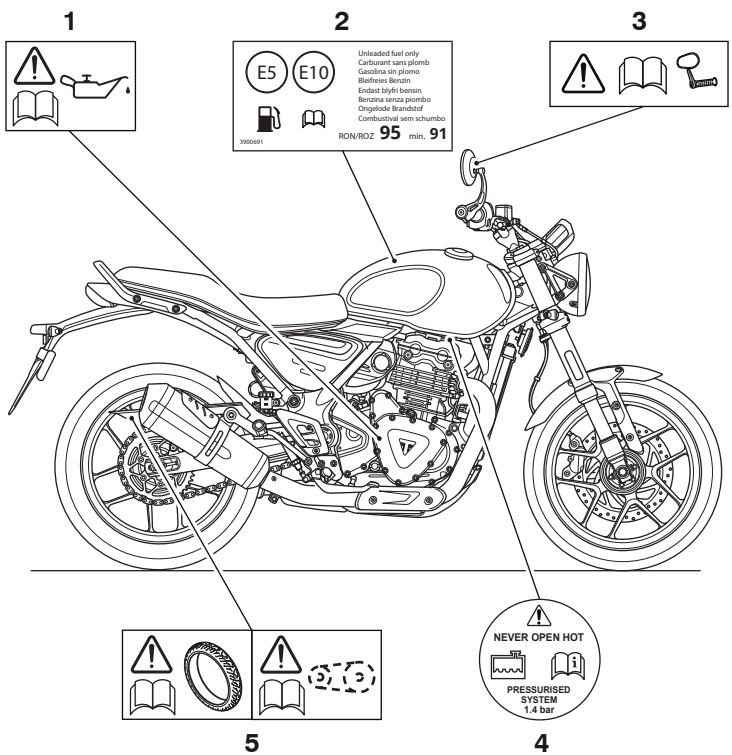

1. Engine Oil (page 120)
2. E5 and E10 Fuel (if fitted) (page 62)
3. Bar End Mirrors (if fitted) (page 147)
4. Coolant - Radiator Filler Cap (page 126)
5. Tyres (page 157) and Drive Chain (page 132)

PARTS IDENTIFICATION

Speed 400

Left Hand Side

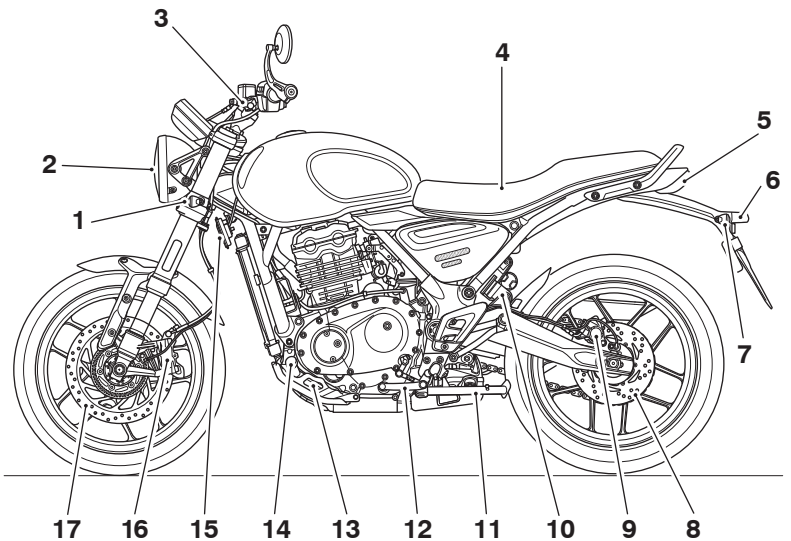

1. Front direction indicator
2. Headlight
3. Clutch lever
4. Battery (under seat)
5. Rear/brake light
6. Licence plate light
7. Rear direction indicator
8. Rear brake disc
9. Rear brake caliper
10. Rear suspension unit
11. Side stand
12. Gear change pedal
13. Coolant expansion tank
14. Coolant expansion tank cap
15. Horn
16. Front brake caliper
17. Front brake disc

Right Hand Side

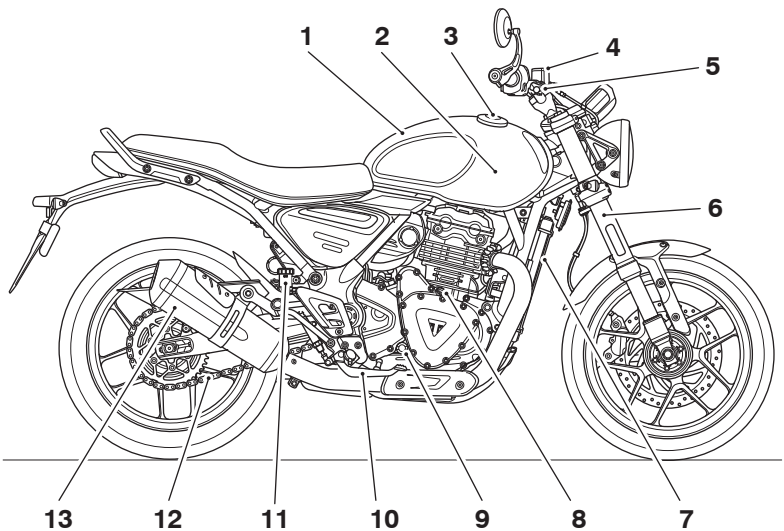

1. Fuel tank
2. Coolant pressure cap (under fuel tank)
3. Fuel filler cap
4. Front brake fluid reservoir
5. Front brake lever
6. Front fork
7. Radiator
8. Oil filler plug
9. Oil level sight glass
10. Rear brake pedal
11. Rear brake fluid reservoir
12. Drive chain
13. Silencer

PARTS IDENTIFICATION

Scrambler 400 X

Left Hand Side

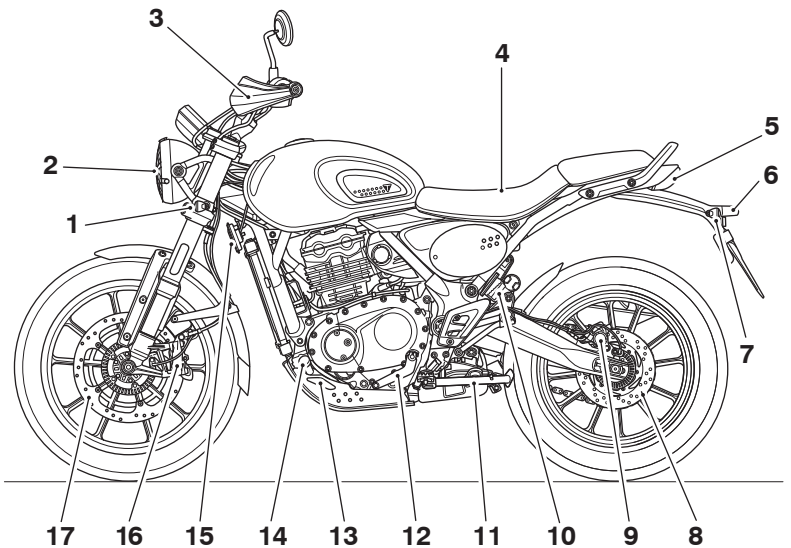

1. Front direction indicator
2. Headlight
3. Clutch lever (behind handguard)
4. Battery (under seat)
5. Rear/brake light
6. Licence plate light
7. Rear direction indicator
8. Rear brake disc
9. Rear brake caliper
10. Rear suspension unit
11. Side stand
12. Gear change pedal
13. Coolant expansion tank
14. Coolant expansion tank cap
15. Horn
16. Front brake caliper
17. Front brake disc

Right Hand Side

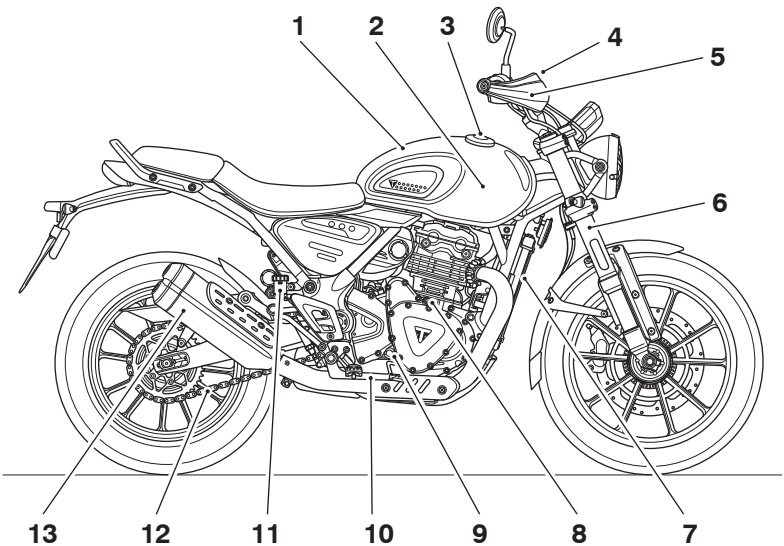

1. Fuel tank
2. Coolant pressure cap (under fuel tank)
3. Fuel filler cap
4. Front brake fluid reservoir (behind handguard)
5. Front brake lever (behind handguard)
6. Front fork
7. Radiator
8. Oil filler plug
9. Oil level sight glass
10. Rear brake pedal
11. Rear brake fluid reservoir
12. Drive chain
13. Silencer

PARTS IDENTIFICATION

Scrambler 400 XC

Left Hand Side

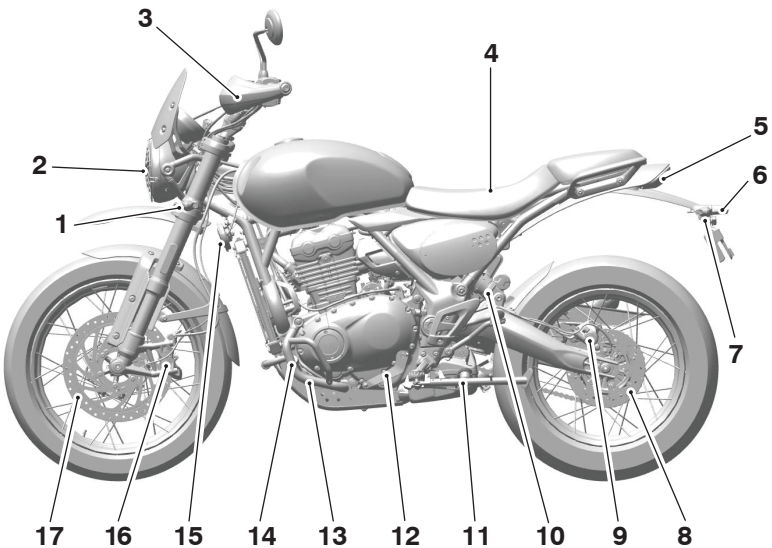

1. Front direction indicator
2. Headlight
3. Clutch lever (behind handguard)
4. Battery (under seat)
5. Rear/brake light
6. Licence plate light
7. Rear direction indicator
8. Rear brake disc
9. Rear brake caliper
10. Rear suspension unit
11. Side stand
12. Gear change pedal
13. Coolant expansion tank (behind lower engine bars)
14. Coolant expansion tank cap (behind lower engine bars)
15. Horn
16. Front brake caliper
17. Front brake disc

Right Hand Side

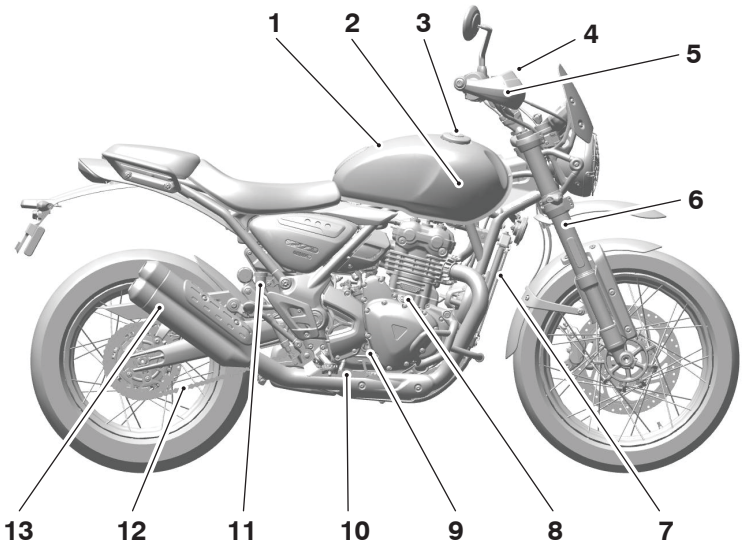

1. Fuel tank
2. Coolant pressure cap (under fuel tank)
3. Fuel filler cap
4. Front brake fluid reservoir (behind handguard)
5. Front brake lever (behind handguard)
6. Front fork
7. Radiator
8. Oil filler plug
9. Oil level sight glass
10. Rear brake pedal
11. Rear brake fluid reservoir
12. Drive chain
13. Silencer

PARTS IDENTIFICATION

Thruxton 400

Left Hand Side

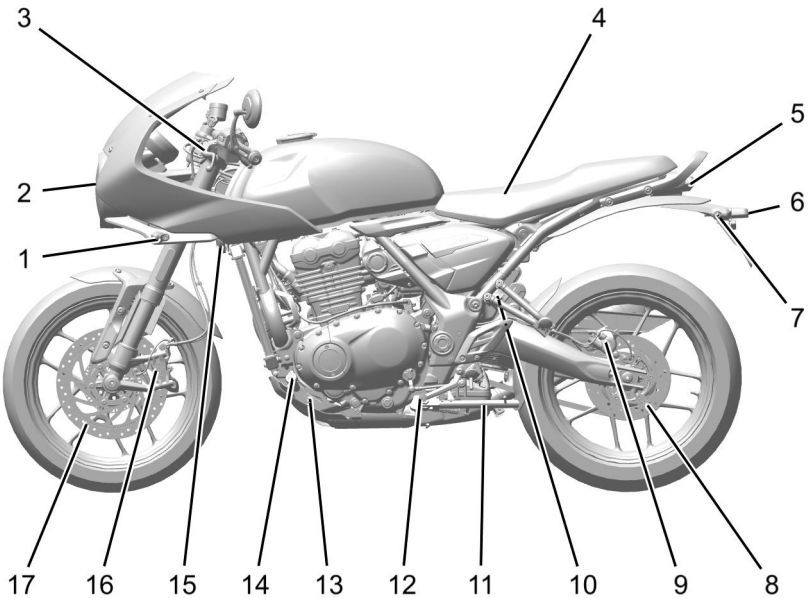

1. Front direction indicator
2. Headlight
3. Clutch lever
4. Battery (under seat)
5. Rear/brake light
6. Licence plate light
7. Rear direction indicator
8. Rear brake disc
9. Rear brake caliper
10. Rear suspension unit
11. Side stand
12. Gear change pedal
13. Coolant expansion tank
14. Coolant expansion tank cap
15. Horn
16. Front brake caliper
17. Front brake disc

Right Hand Side

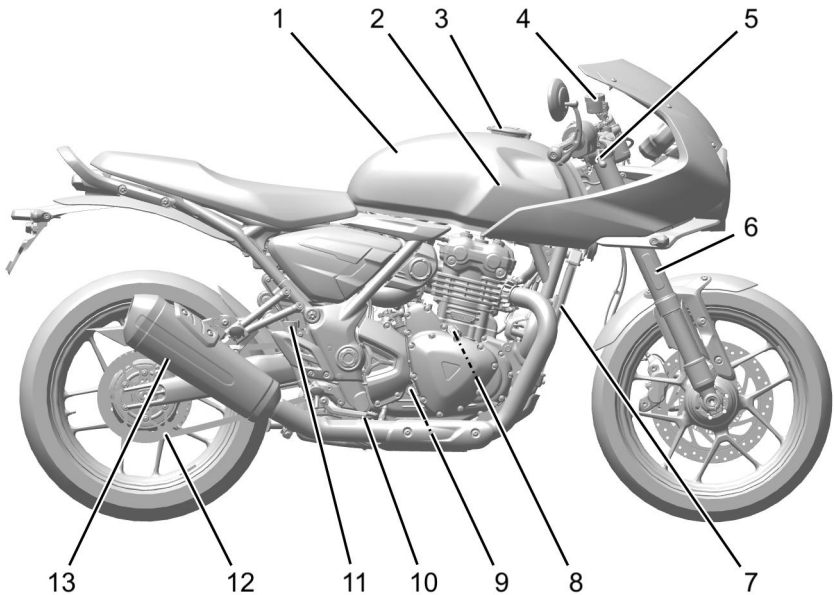

1. Fuel tank
2. Coolant pressure cap (under fuel tank)
3. Fuel filler cap
4. Front brake fluid reservoir
5. Front brake lever
6. Front fork
7. Radiator
8. Oil filler plug
9. Oil level sight glass
10. Rear brake pedal
11. Rear brake fluid reservoir
12. Drive chain
13. Silencer

PARTS IDENTIFICATION

Tracker 400

Left Hand Side

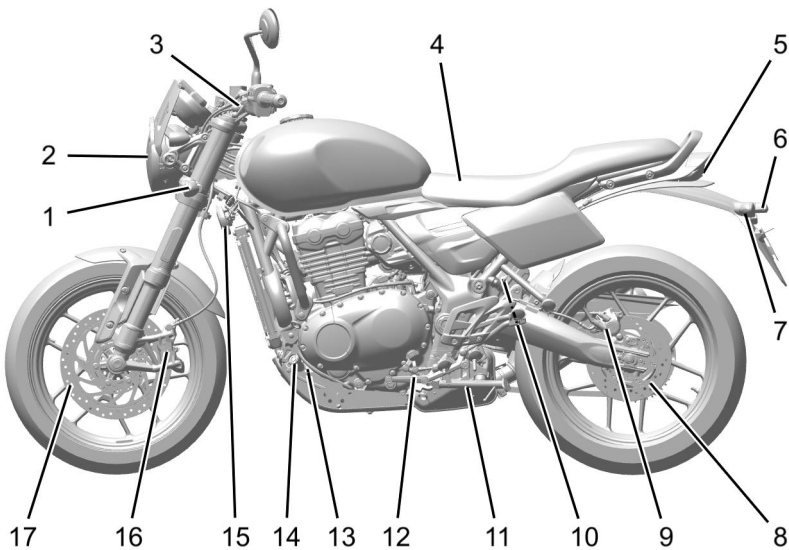

1. Front direction indicator
2. Headlight
3. Clutch lever
4. Battery (under seat)
5. Rear/brake light
6. Licence plate light
7. Rear direction indicator
8. Rear brake disc
9. Rear brake caliper
10. Rear suspension unit
11. Side stand
12. Gear change pedal
13. Coolant expansion tank
14. Coolant expansion tank cap
15. Horn
16. Front brake caliper
17. Front brake disc

Right Hand Side

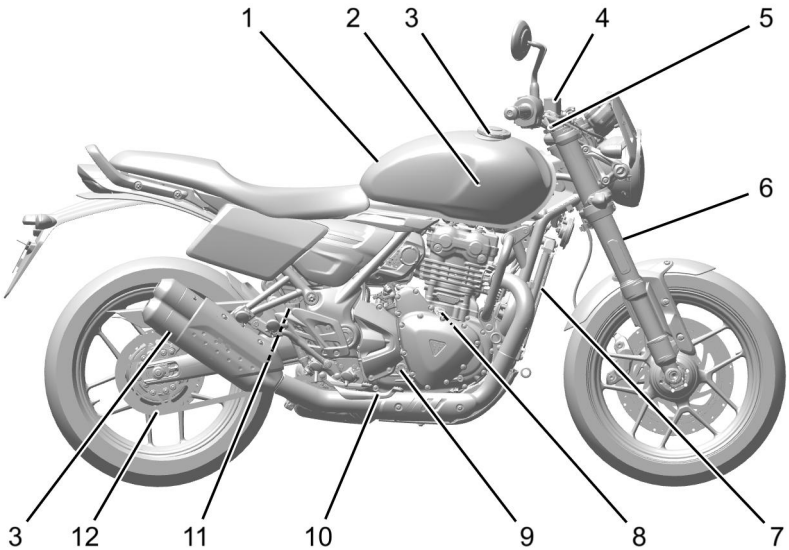

1. Fuel tank
2. Coolant pressure cap (under fuel tank)
3. Fuel filler cap
4. Front brake fluid reservoir
5. Front brake lever
6. Front fork
7. Radiator
8. Oil filler plug
9. Oil level sight glass
10. Rear brake pedal
11. Rear brake fluid reservoir
12. Drive chain
13. Silencer

PARTS IDENTIFICATION

Rider View Parts Identification

Speed 400, Scrambler 400 X and Scrambler 400 XC

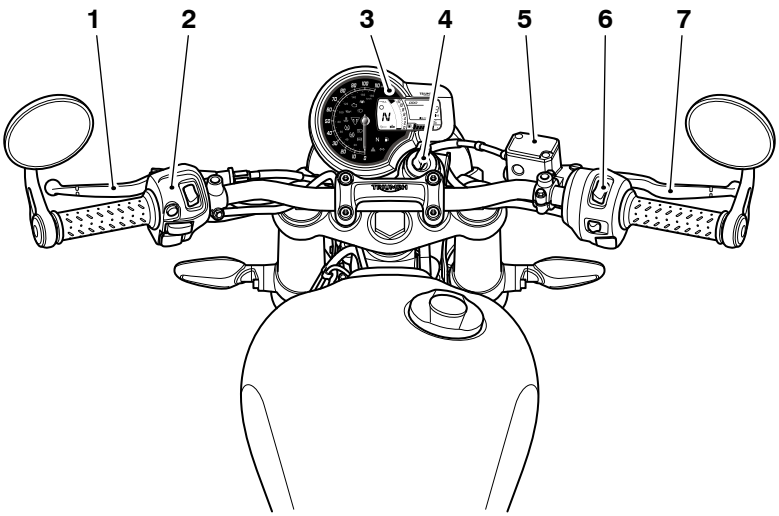

1. Clutch lever
2. Left hand switch housing, see page 60
3. Instruments, see page 36
4. Ignition switch
5. Front brake fluid reservoir
6. Right hand switch housing, see page 59
7. Front brake lever

Thruxton 400

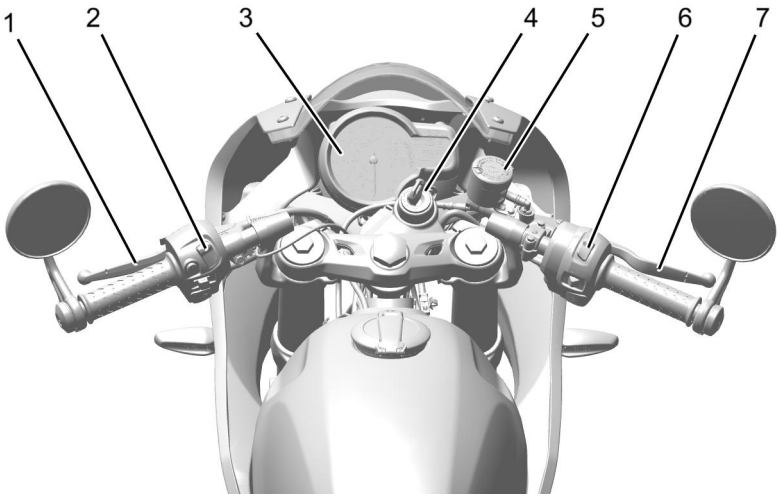

1. Clutch lever
2. Left hand switch housing, see page 60
3. Instruments, see page 36
4. Ignition switch
5. Front brake fluid reservoir
6. Right hand switch housing, see page 59
7. Front brake lever

Tracker 400

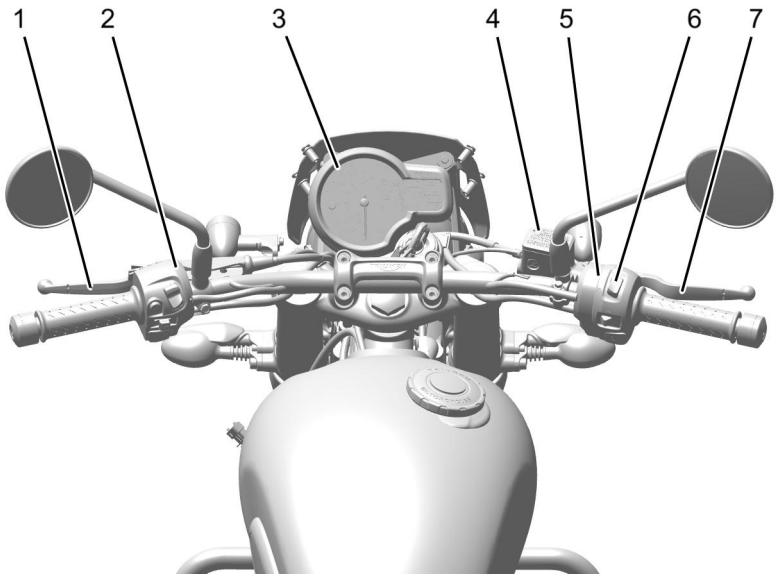

1. Clutch lever
2. Left hand switch housing, see page 60
3. Instruments, see page 36
4. Front brake fluid reservoir
5. Right hand switch housing, see page 59
6. Ignition switch
7. Front brake lever

Vehicle Identification Number (VIN)

The Vehicle Identification Number (VIN) is stamped into the right hand side of the headstock.

The VIN is also shown on a label attached to the left hand side of the frame, directly behind the top of the radiator.

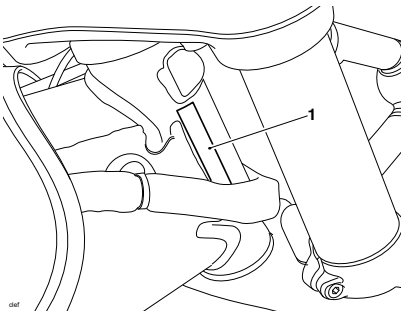

1. VIN stamp (Scrambler 400 X shown)

Record the VIN in the space provided in the Motorcycle Service Handbook.

Engine Serial Number

The engine serial number is stamped on the lower engine crankcase, and is visible from the right hand side of the motorcycle, below the engine oil sight glass.

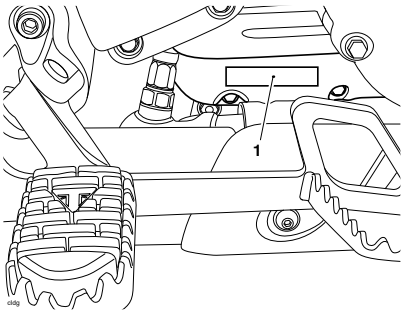

1. Engine serial number (Scrambler 400 X shown)

Record the engine serial number in the space provided in the Motorcycle Service Handbook.

This page intentionally left blank

Table of Contents

Instruments Display 36
Warning Lights 37
- Engine Management System Malfunction Indicator Light (MIL) 37
- Low Oil Pressure Warning Light 38
- High Coolant Temperature Warning Light 38
- Engine Immobiliser Indicator Light 39
- Anti-lock Braking System (ABS) Warning Light 39
- Traction Control (TC) Indicator Light 40
- Traction Control (TC) Disabled Warning Light 41
- Direction Indicator Light 41
- Hazard Warning Lights 41
- High Beam Indicator Light 41
- Daytime Running Lights (DRL) Indicator Light (if fitted) 42
- Neutral Indicator Light 42
- Low Fuel Indicator Light 42

Speedometer 43
Multi-function Display 43
- Odometer 43
- Tachometer 44
- Fuel Gauge 44
- Gear Position 45
- Side Stand 45
- Clock 46
- Service 46
- Trip Meter 47
- Current Fuel Consumption 48
- Average Fuel Consumption 48
- Range To Empty 49
- Triumph Traction Control (TTC) Setting 49
- Off-road Mode 51
- Set 52

Instruments Display

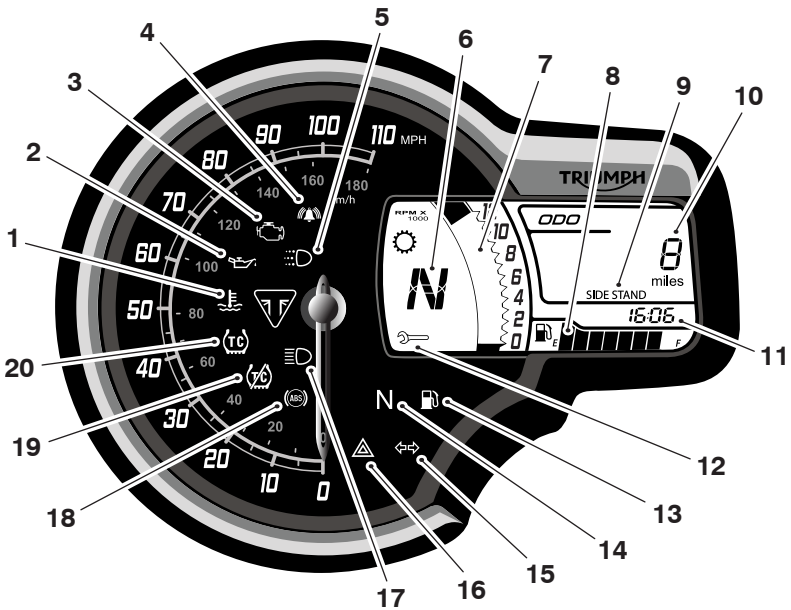

1. High coolant temperature warning light
2. Low oil pressure warning light
3. Engine management Malfunction Indicator Light (MIL)
4. Engine immobiliser indicator light
5. Daytime Running Lights (DRL) indicator light (if fitted)
6. Gear position indicator
7. Tachometer
8. Fuel gauge
9. Side stand indicator
10. Multi-function display (Odometer shown)
11. Clock
12. Service symbol or general warning symbol
13. Low fuel indicator light
14. Neutral indicator light
15. Direction indicator light
16. Hazard warning light
17. High beam indicator light
18. Anti-lock Brake System (ABS) warning light
19. Traction Control (TC) disabled warning light
20. Traction Control (TC) indicator light

Warning Lights

NOTICE

If a red warning light is shown, the motorcycle must be stopped immediately.

If an amber warning light is shown, the motorcycle does not need to be stopped immediately.

Always read any warning messages and rectify the issue.

When the ignition is switched on, the instrument warning lights will illuminate for 1.5 seconds and will then go off (except those which remain on until the engine starts, as described in the following pages).

Engine Management System Malfunction Indicator Light (MIL)

⚠ WARNING

Reduce speed and do not continue to ride for longer than is necessary with the Malfunction Indicator Light (MIL) illuminated. The fault may affect engine performance, exhaust emissions and fuel consumption.

The fault must be checked and rectified by a competent person with the specialist knowledge and technical understanding of motorcycles, such as an authorised Triumph dealer.

Reduced engine performance could cause a dangerous riding condition, leading to loss of motorcycle control, which could result in serious injury or death.



The Malfunction Indicator Light (MIL) for the engine management system illuminates when the ignition is switched ON (to indicate that it is working), but should not become illuminated when the engine is running.

If the engine is running and there is a fault with the engine management system, the MIL will be illuminated and the general warning symbol will flash. In such circumstances, the engine management system may switch to 'limp-home' mode so that the journey may be completed, if the fault is not so severe that the engine will not run.

If the MIL flashes when the ignition is switched ON, contact an authorised Triumph dealer as soon as possible to have the situation rectified. In these circumstances the engine will not start.

Low Oil Pressure Warning Light

NOTICE

If the engine oil pressure is too low, the low oil pressure warning light will illuminate.

If the low oil pressure indicator remains on, stop the engine immediately and investigate the situation.

Running the engine with low oil pressure will cause severe engine damage.



With the engine running, if the engine oil pressure becomes dangerously low, the low oil pressure warning light will illuminate. The low oil pressure warning light will also illuminate if the ignition is switched ON without running the engine.

High Coolant Temperature Warning Light

NOTICE

Stop the engine immediately if the high coolant temperature warning light illuminates.

Do not restart the engine until the fault has been rectified.

Severe engine damage will result from running the engine when the high coolant temperature warning light is illuminated.



With the engine running, if the engine coolant temperature becomes dangerously high, the high coolant temperature warning light will illuminate.

Engine Immobiliser Indicator Light



This motorcycle is fitted with an engine immobiliser which is activated when the ignition switch is turned to the OFF position.

When the ignition switch is turned to the OFF position, the engine immobiliser light will flash on and off for 24 hours to show that the engine immobiliser is on. When the ignition switch is turned to the ON position the engine immobiliser and the indicator light will be off.

If the indicator light remains on it indicates that the engine immobiliser has a malfunction that requires investigation. The fault must be checked and rectified by a competent person with the specialist knowledge and technical understanding of motorcycles, such as an authorised Triumph dealer.

Anti-lock Braking System (ABS) Warning Light

⚠ WARNING

If the Anti-lock Brake System (ABS) is not functioning, the brake system will continue to function as a non-ABS equipped brake system. Do not continue to ride for longer than is necessary with the ABS warning light illuminated.

The fault must be checked and rectified by a competent person with the specialist knowledge and technical understanding of motorcycles, such as an authorised Triumph dealer.

Braking too hard will cause the wheels to lock, leading to loss of motorcycle control, which could result in serious injury or death.

NOTICE

Traction control will not function if there is a malfunction with the ABS. The warning lights for the ABS, traction control and the MIL will be illuminated.



When the ignition switch is turned to the ON position, it is normal that the ABS warning light will be illuminated. The light will remain on until the motorcycle first reaches a speed exceeding 6 mph (10 km/h) when it will go off.

The warning light will not illuminate again until the engine is restarted unless there is a fault, or the ABS is disabled by the rider (off-road mode for Scrambler 400 X and Scrambler 400 XC only).

Scrambler 400 X and Scrambler 400 XC only: If the ABS is disabled by the rider (off-road mode), the warning light will remain illuminated until the ABS is enabled again.

If there is a fault with the ABS system the warning light will be illuminated and the general warning symbol will flash.

Traction Control (TC) Indicator Light

⚠ WARNING

If the traction control is not functioning, care must be taken when accelerating and cornering on wet/slippery road surfaces to avoid rear wheel spin. Do not continue to ride for longer than is necessary with the engine management system Malfunction Indicator Light (MIL) and traction control warning lights illuminated.

The fault must be checked and rectified by a competent person with the specialist knowledge and technical understanding of motorcycles, such as an authorised Triumph dealer.

Hard acceleration and cornering may cause the rear wheel to spin, leading to loss of motorcycle control, which could result in serious injury or death.

NOTICE

Traction control will not function if there is a malfunction with the ABS. The warning lights for the ABS, traction control and the MIL will be illuminated.



The Traction Control (TC) indicator light is used to indicate that the traction control system is active and is working to limit rear wheel slip during periods of hard acceleration or under wet or slippery road conditions.

If traction control is switched on:

- Under normal riding conditions the TC indicator light will remain off.
- The TC indicator light will flash rapidly when the traction control system is working to limit rear wheel slip during periods of hard acceleration or under wet or slippery road conditions.

If traction control is switched off:

- The TC indicator light will not illuminate. Instead the TC disabled warning light will be illuminated.

Traction Control (TC) Disabled Warning Light



The Traction Control (TC) disabled warning light should not illuminate unless traction control is switched off, or there is a malfunction.

If the warning light becomes illuminated while riding, it indicates that the traction control system has a malfunction that requires investigation. The fault must be checked and rectified by a competent person with the specialist knowledge and technical understanding of motorcycles, such as an authorised Triumph dealer.

Direction Indicator Light



When the direction indicator switch is turned to the left or right, the direction indicator light will flash on and off at the same speed as the direction indicators.

Hazard Warning Lights



When the hazard warning lights switch is turned on, the direction indicator lights will flash on and off at the same speed as the direction indicators.

High Beam Indicator Light



When the ignition is switched ON and the high beam is selected, the high beam indicator light will illuminate.

Daytime Running Lights (DRL) Indicator Light (if fitted)

NOTICE

During daylight hours, the Daytime Running Lights (DRL) improve the visibility of the motorcycle to other road users.

Dipped beam headlights must be used in any other conditions unless the road conditions allow for high beam headlights to be used.



When the ignition is switched ON and the daytime running lights switch is set to Daytime Running Lights (DRL), the DRL indicator light will illuminate.

When the dipped beam headlight is on, the DRL indicator light will be off.

The DRL and dipped beam headlights are operated manually using a switch on the left hand switch housing.

Neutral Indicator Light



The neutral indicator light indicates when the transmission is in neutral (no gear selected). The indicator light will illuminate when the transmission is in neutral with the ignition switch in the ON position.

Low Fuel Indicator Light



The low fuel indicator light will illuminate when there is an approximate level of fuel remaining in the tank, as specified in the Specifications section.

Speedometer

The speedometer indicates the road speed of the motorcycle.

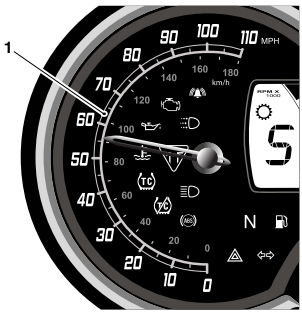

1. **Speedometer (mph display shown)**

Condensation

In certain conditions, condensation may occur inside the speedometer.

Condensation may happen while it is raining or after washing the motorcycle.

Condensation inside the speedometer will gradually disappear while riding the motorcycle.

Time for evaporation will vary depending on the humidity of the ambient air.

NOTICE

If condensation inside the speedometer does not clear, we recommend that the speedometer is inspected by a competent person with the specialist knowledge and technical understanding of motorcycles, such as an authorised Triumph dealer.

Multi-function Display

Odometer

The odometer shows the total distance that the motorcycle has travelled.

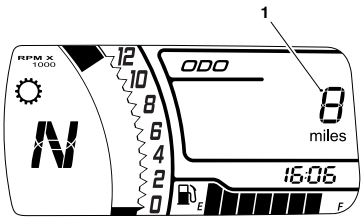

1. **Odometer**

Tachometer

NOTICE

Never allow engine speed to exceed the maximum engine speed as severe engine damage may result.

The tachometer shows the engine speed in revolutions per minute - rpm (r/min).

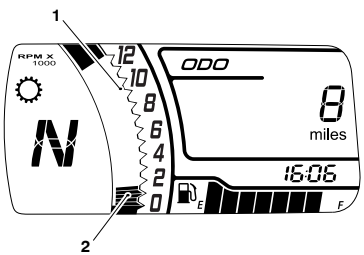

1. **Maximum engine speed**
2. **Engine speed (rpm)**

The maximum engine speed for the Speed 400, the Scrambler 400 X and the Scrambler 400 XC is 9,500 rpm.

The maximum engine speed for the Thruxton 400 and the Tracker 400 is 10,500 rpm.

Engine speeds above the maximum engine speed are above the range for best engine performance and may result in engine damage.

For more information on the tachometer during running-in, see page 89.

Fuel Gauge

The fuel gauge indicates the amount of fuel in the tank.

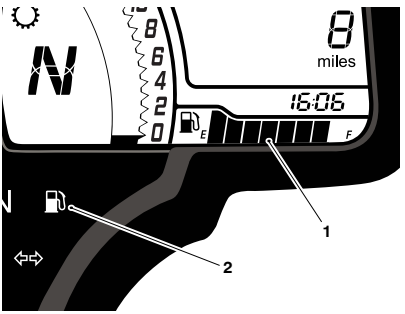

1. **Fuel gauge**
2. **Low fuel indicator light**

With the ignition switched on, the number of bars shown in the display indicates the level of fuel.

When the fuel tank is full all eight bars are displayed and when empty, no bars are displayed. Other gauge markings indicate intermediate fuel levels between full and empty.

The low fuel indicator light will illuminate when there is an approximate level of fuel remaining in the tank, as specified in the Specifications section, and you should refuel at the earliest opportunity.

NOTICE

After refuelling, the fuel gauge information will be updated only while riding the motorcycle. Depending on the riding style, updating could take up to one minute.

Gear Position

The gear position display indicates which gear (1-6) has been engaged. When the transmission is in neutral (no gear selected), the display screen will show 'N'.

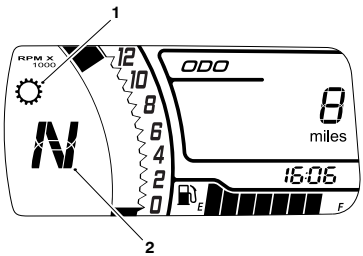

1. **Gear position symbol**
2. **Gear position display (neutral shown)**

Side Stand

The side stand indicator shows when the side stand is down. The indicator will not be shown when the side stand is up.

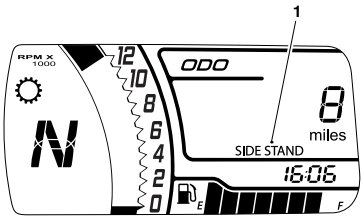

1. **Side stand indicator**

For more information on the side stand, see page 68.

Clock

The clock displays the time in the 24 hour format.

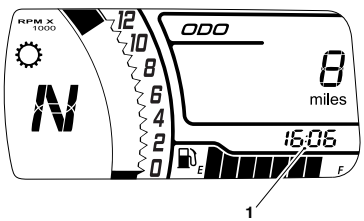

1. **Clock**

Service

The service interval is set to a distance and/or time period.

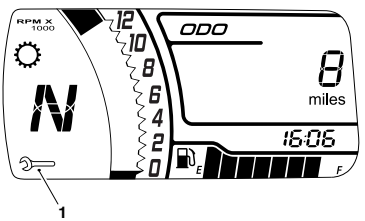

1. **Service symbol or general warning symbol**

When the ignition is switched on and the distance to the next service is 62 miles (100 km) or less, the display will show the service symbol for five seconds after the ignition is switched on. When the remaining distance is 0 miles (0 km) or overdue, the service symbol will remain on until the service has been carried out and the system has been reset.

We recommend the service interval is reset by a competent person with the specialist knowledge and technical understanding of motorcycles, such as an authorised Triumph dealer.

Trip Meter

⚠ WARNING

Do not attempt to switch between the odometer and trip meter display modes or reset the trip meter while the motorcycle is in motion.

Stop the motorcycle to switch between the odometer and trip meter display modes or reset the trip meter.

Failure to follow the advice above may lead to loss of motorcycle control, which could result in serious injury or death.

There are two trip meters. Either trip meter shows the distance that the motorcycle has travelled since the meter on display was last reset to zero.

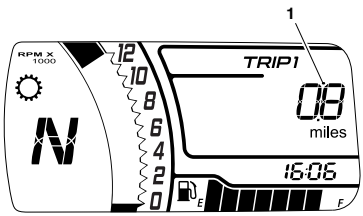

1. **Trip meter display (TRIP 1 shown)**

To switch between trip meters, push and release the SCROLL/SELECT button, located on the left handlebar switch, until the required trip meter is shown.

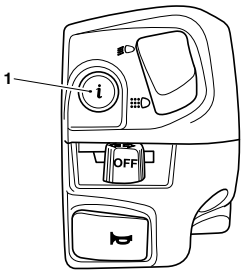

cldn_1

1. **SCROLL/SELECT button**

Scrambler 400 X and Scrambler 400 XC Only

The trip meters are not accessible when in off-road mode. The trip meter data continues to be collected when riding in off-road mode. The updated trip meter data is shown in the trip meters after switching the off-road mode off.

Trip Meter Reset

To reset either of the trip meters:

- Select the trip meter to be zeroed.
- Push and hold the SCROLL/SELECT button for one second. After more than one second, the trip meter on display will reset to zero.

When TRIP 1 or TRIP 2 has been reset, the average fuel consumption for the same trip meter will also be reset.

Current Fuel Consumption

This is an indication of the fuel consumption at an instant in time. If the motorcycle is stationary, 0.0 will be shown in the display area.

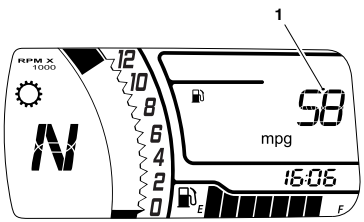

1. Current fuel consumption

The instruments will display the current fuel consumption in the following units:

- km/l
- l/100km
- mpg.

Average Fuel Consumption

This is an indication of the average fuel consumption. After being reset the display will show dashes until one mile/km has been covered.

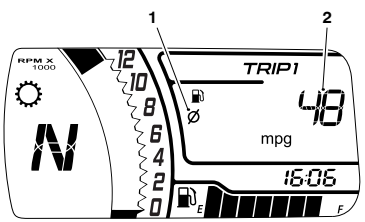

1. Average symbol
2. Average fuel consumption

Average fuel consumption is displayed for TRIP 1 and TRIP 2, see page 47.

The instruments will display the average fuel consumption in the following units:

- km/l
- l/100km
- mpg.

NOTICE

After refuelling, the average fuel consumption information will be updated only while riding the motorcycle. Depending on the riding style, updating could take up to one minute.

Range To Empty

This is an indication of the predicted distance that can be travelled on the remaining fuel in the tank.

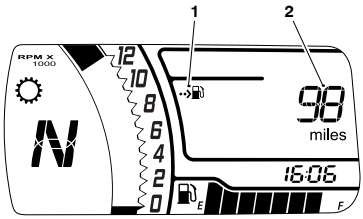

1. **Range to empty indicator**
2. **Estimated distance remaining**

NOTICE

After refuelling, the range to empty information will be updated only while riding the motorcycle. Depending on the riding style, updating could take up to one minute.

Triumph Traction Control (TTC) Setting

The Triumph Traction Control (TTC) system can be temporarily disabled. The TTC system cannot be permanently disabled, it will be automatically enabled when the ignition is turned off and then on again.

To disable the TTC system:

- Start the engine.
- Push and release the SCROLL/SELECT button until 'ttc On' is displayed. The TC indicator light will illuminate on the instruments display.

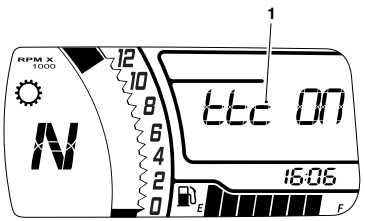

1. **Traction control on display**

NOTICE

Holding the button for less than five seconds will not change the setting.

- Push and hold the SCROLL/SELECT button for more than five seconds, then release the button. The display will change to 'ttcOFF', and the TC disabled warning light will illuminate on the instruments display.

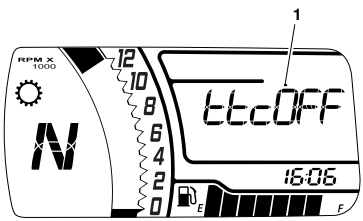

1. **Traction control off display**

To enable the TTC system:

- Start the engine.
- Push and hold the SCROLL/SELECT button until 'ttcOFF' is displayed.

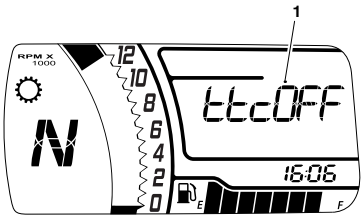

1. **Traction control off display**

NOTICE

Holding the button for less than five seconds will not change the setting.

- Push and hold the SCROLL/SELECT button for more than five seconds, then release the button. The display will change to 'ttc On', and the TC disabled warning light will go off.

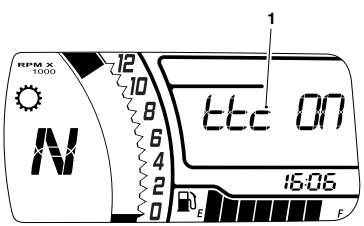

1. **Traction control on display**

Off-road Mode

Scrambler 400 X and Scrambler 400 XC Only

NOTICE

Off-road mode will be automatically disabled when the ignition is turned off and then on again.

To enable the off-road mode:

- Start the engine.
- Push and release the SCROLL/SELECT button until 'OFF rd' is displayed and flashing.

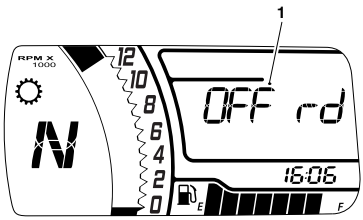

1. **Off-road mode display**

- Push and hold the SCROLL/SELECT button until 'ON' is shown in the display, then release the button.
- After 5 seconds, 'OFF rd' will be displayed (not flashing), and the ABS warning light and Traction Control (TC) disabled warning light will be illuminated. The SCROLL/SELECT button will no longer change the display.

Mode	Description
Off-road	Anti-lock Braking System (ABS) is off. Traction Control (TC) is off. All Multi-function Display menus are not shown. Trip meter data continues to be collected when riding in this mode. Off-road mode can only be selected when the motorcycle is stationary.

To disable the off-road mode:

- Push and hold the SCROLL/SELECT button until 'OFF' is shown in the display, then release the button.
- After 5 seconds, 'OFF rd' will be displayed and flashing, and the ABS warning light and TC disabled warning light will go off.
- The SCROLL/SELECT button will now work to change the display as normal.

Set

The set menu allows configuration of the clock and units.

To access the set menu:

- Push and release the SCROLL/SELECT button until the set menu is displayed.

Clock

⚠ WARNING

Do not attempt to set the clock while the motorcycle is in motion.

Stop the motorcycle to set the clock.

Failure to follow the advice above may lead to loss of motorcycle control, which could result in serious injury or death.

The clock menu allows the adjustment of the clock to be set to the local time.

To set the clock:

- From the set menu, push and hold the SCROLL/SELECT button to select CLOCK.

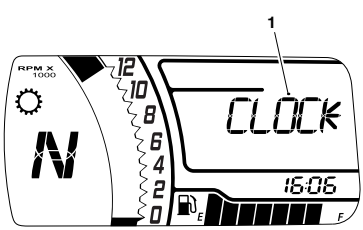

1. **Clock menu**

- From CLOCK, push and hold the SCROLL/SELECT button and the clock's hour display will start to flash. Release the SCROLL/SELECT button.

To set the hour display:

- Make sure the hour display is still flashing then push and release the SCROLL/SELECT button to change the setting. Each individual push of the button will change the setting by one digit.
- When the correct hour display is shown, push and hold the SCROLL/SELECT button. The hours display is set and the minutes display will begin to flash. The minutes display is adjusted in the same way as the hour display.
- Once both hours and minutes are correctly set the numbers will stop flashing. The menu will automatically revert back to the previous screen after four seconds.

Units

⚠ WARNING

Do not attempt to set the units while the motorcycle is in motion.

Stop the motorcycle to set the units.

Failure to follow the advice above may lead to loss of motorcycle control, which could result in serious injury or death.

The units menu allows the selection of a preferred unit of measurement.

The options available are defined by the speedometer display (this cannot be changed).

Km/h speedometer will display the following options:

- EU - km and l/100km
- AS - km and km/l

Mph speedometer will display the following options:

- UK - miles and mpg
- US - miles and mpg
- EU - km and l/100km
- AS - km and km/l

To set the units:

- From the set menu, push and hold the SCROLL/SELECT button for one second to select CLOCK.
- From CLOCK, push and release the SCROLL/SELECT button until UNITS is displayed.

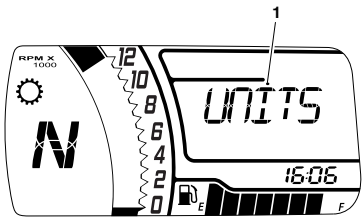

1. **Units menu**

- Push and hold the SCROLL/SELECT button for one second to select UNITS.
- From UNITS, push and release the SCROLL/SELECT button to select the required option.

This page intentionally left blank

Table of Contents

Controls 56
Throttle Control 56
Ignition Switch/Steering Lock 56
Ignition Key 57
Engine Immobiliser 59
Right Handlebar Switches 59
Left Handlebar Switches 60
Fuel 62
Refuelling 64
Fuel Tank Cap 65
Filling the Fuel Tank 66
Traction Control (TC) 66
Traction Control Settings 67
To Disable the Traction Control 67
Side Stand 68
Side Panels 69
Side Panels - Removal 69
Side Panel - Installation 74
Seats 79
Seat Care 79
Seat Lock 79
Seat - Removal 80
Seat - Installation 82
Owner's Handbook and Tool Kit 86
Universal Serial Bus (USB) Socket 86
Running-In 89
Daily Safety Checks 90

Controls

Throttle Control

All models have an electronic throttle twist grip to open and close the throttle via the engine ECM. There are no direct-acting cables in the system.

The throttle grip has a resistive feel to it as it is rolled rearwards to open the throttle. When the grip is released it will return to the throttle closed position by its internal return spring and the throttle will close.

There are no user adjustments for the throttle control.

If there is a malfunction with the throttle control the Malfunction Indicator Light (MIL) becomes illuminated and one of the following engine conditions may occur:

- MIL illuminated, restricted engine RPM and throttle movement
- MIL illuminated, limp-home mode with the engine at a fast idle condition only
- MIL illuminated, engine will not start.

For all of the conditions mentioned, the fault must be checked and rectified by a competent person with the specialist knowledge and technical understanding of motorcycles, such as an authorised Triumph dealer.

⚠ WARNING

Reduce speed and do not continue to ride for longer than is necessary with the Malfunction Indicator Light (MIL) illuminated. The fault may affect engine performance, exhaust emissions and fuel consumption.

The fault must be checked and rectified by a competent person with the specialist knowledge and technical understanding of motorcycles, such as an authorised Triumph dealer.

Reduced engine performance could cause a dangerous riding condition, leading to loss of motorcycle control, which could result in serious injury or death.

Ignition Switch/Steering Lock

⚠ WARNING

For reasons of security and safety, always turn the ignition to the LOCK position and remove the key when leaving the motorcycle unattended.

Any unauthorised use of the motorcycle may lead to loss of motorcycle control which could result in serious injury or death.

⚠ WARNING

With the key in the LOCK position, the steering will become locked.

Never turn the key to the LOCK position while the motorcycle is moving as this will cause the steering to lock.

Locked steering will lead to loss of motorcycle control which could result in serious injury or death.

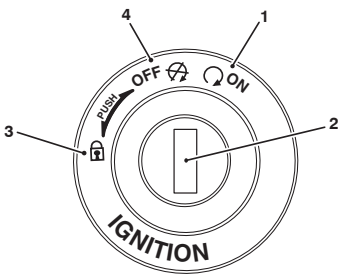

1. **ON position**
2. **Ignition switch/steering lock**
3. **LOCK position**
4. **OFF position**

Switch Operation

This is a three position, key operated switch. The key can be removed from the switch only when it is in the OFF or LOCK position.

TO LOCK: Turn the steering fully to the left, turn the key to the OFF position, push and fully release the key, then rotate it to the LOCK position.

Ignition Key

⚠ WARNING

Additional keys, key rings/chains or items attached to the ignition key may interfere with the steering.

Remove all additional keys, key rings/chains and items from the ignition key before riding the motorcycle.

Failure to follow the advice above may lead to loss of motorcycle control, which could result in serious injury or death.

NOTICE

Additional keys, key rings/chains or items attached to the ignition key may cause damage to the motorcycle's painted or polished components.

Remove all additional keys, key rings/chains and items from the ignition key before riding the motorcycle.

NOTICE

Do not store the spare key with the motorcycle as this will reduce all aspects of security.

NOTICE

Key functions may be disrupted by electronic devices, environmental electrical noise sources and metal objects.

Avoid storing and using the key near the following:

- Electrical service masts, radio masts and power distribution infrastructure
- Garage door opener devices
- Radio-Frequency Identification (RFID) access cards or fobs
- Metal, metallic card holders and aluminium items
- Other vehicle electronic keys
- In panniers or top boxes
- Wireless communication devices such as mobile phones, tablets, laptops, portable game systems, audio players, radios and chargers.

In addition to operating the ignition switch/steering lock, the ignition key is required to operate the seat lock and fuel tank cap.

When the motorcycle is delivered from the factory, two ignition keys are supplied together with a small tag bearing the key number. Make a note of the key number and store the spare key and key number tag in a safe place away from the motorcycle.

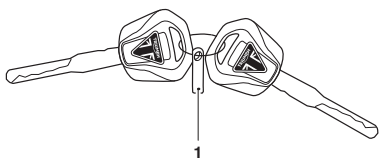

1. Key number tag

A transponder is fitted within the ignition keys to turn off the engine immobiliser. To make sure the immobiliser functions correctly, always have only one of the ignition keys near the ignition switch. Having two ignition keys near the switch may interrupt the signal between the transponder and the engine immobiliser. In this situation the engine immobiliser will remain active until one of the ignition keys is removed.

Replacement keys must be 'paired' with the motorcycle's immobiliser.

Engine Immobiliser

The ignition switch housing acts as the antenna for the engine immobiliser.

When the ignition switch is turned to the OFF position and the ignition key is removed, the engine immobiliser is on (see page 39). The engine immobiliser is turned off when the ignition key is in the ignition switch and it is turned to the ON position.

Right Handlebar Switches

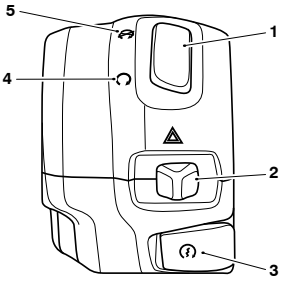

oldy

1. **Engine run/stop switch**
2. **Hazard warning light switch**
3. **START button**
4. **RUN position**
5. **STOP position**

STOP Position

The STOP position is for emergency use. If an emergency arises which requires the engine to be stopped, move the engine run/stop switch to the STOP position.

NOTICE

Although the engine stop switch stops the engine, it does not turn off all the electrical circuits and may cause difficulty in restarting the engine due to a discharged battery. Ordinarily, only the ignition switch should be used to stop the engine.

Do not leave the ignition switch in the ON position unless the engine is running as this may cause damage to electrical components and will discharge the battery.

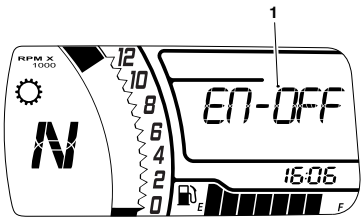

1. Engine stop switch on display

When the engine run/stop switch is in the STOP position, the instruments will display the above message.

RUN Position

In addition to the ignition switch being turned to the ON position, the engine run/stop switch must be in the RUN position for the motorcycle to operate.

START Button

The START button operates the electric starter.

NOTICE

The starter will not operate if the side stand is down and a gear is engaged.

Hazard Warning Light Switch

To turn the hazard warning lights on, push the hazard warning light switch to the left.

The ignition must be switched ON for the hazard warning lights to function.

The hazard warning lights will remain on if the ignition is switched OFF, until the hazard warning light switch is pushed to the right.

Left Handlebar Switches

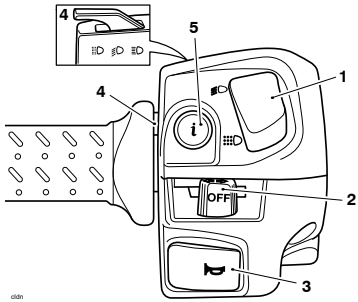

1. **Dipped beam/Daytime Running Lights (DRL) switch (if fitted)**
2. **Direction indicator switch**
3. **Horn button**
4. **High beam switch**
5. **SCROLL/SELECT button**

SCROLL/SELECT Button

The SCROLL/SELECT button is used to operate the following functions of the instruments:

- Odometer (see page 43)
- Trip meters and reset (see page 47)
- Average fuel consumption and reset (see page 48)
- Traction control (see page 49)
- Off-road mode (see page 51)
- Clock (see page 52)
- Units (see page 52).

Dipped Beam/Daytime Running Lights (DRL) Switch (if fitted)

NOTICE

Daytime Running Lights (DRL) are manually operated. They are not automatic.

The daytime running lights or dipped beam can be selected with the Daytime Running Lights (DRL) switch.

To select daytime running lights, push the dipped beam/DRL switch downwards.

To select dipped beam, push the dipped beam/DRL switch upwards.

When the daytime running lights are turned on, the daytime running lights indicator light will illuminate in the instrument panel.

Direction Indicator Switch

When the direction indicator switch is pushed to the left or right, the corresponding direction indicators will flash on and off.

The indicators can be cancelled manually. To manually turn off the indicators, push and release the indicator switch in the central position.

Horn Button

When the horn button is pushed, with the ignition switch turned on, the horn will sound.

High Beam Switch

This is a three position switch.

When the high beam switch is pushed forward the high beam will be switched on. Push the switch back to the central position to turn the high beam off. The high beam will only come on when the engine is running or the motorcycle is moving at greater than 3 mph (5 km/h).

Push and release the switch rearwards to engage a flash function. Releasing will return the switch to the central position and turn the high beam off.

If daytime running lights are fitted to the motorcycle, the high beam switch has additional functionality.

If the DRL switch is in the daytime running lights position, push the high beam switch forward to turn the high beam on. When the high beam switch is returned to the central position the DRL will be activated again.

A lighting on/off switch is not fitted to this model. The position light, rear light and licence plate light all function automatically when the ignition is on.

The headlight and DRL will function when the engine is on.

Fuel



The fuel grade required for the motorcycle is stated in the relevant Specifications section. Always check that the correct fuel grade is being used before filling the tank.

Triumph motorcycles are designed to use unleaded fuel and will give optimum performance if the correct grade of fuel is used.

Fuel grade is described as either Research Octane Number (RON) or Motor Octane Number (MON), or Cost of Living Council (CLC) or Anti-Knock Index (AKI) octane rating (R+M)/2.

In North America, federal regulations require that pumps delivering unleaded gasoline are marked 'UNLEADED' and that the CLC or AKI octane rating is also displayed. These ratings are an average of the RON and the MON.

Ethanol

In Europe, Triumph motorcycles are compatible with Ethanol E5 and E10 (5% and 10% Ethanol) unleaded fuel.

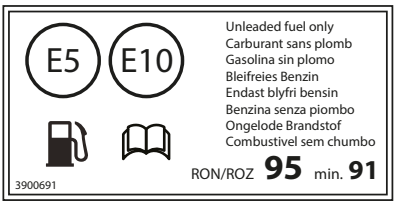

91 RON Fuel Grade Label Shown

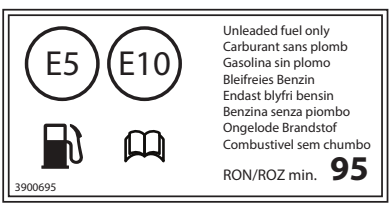

95 RON Fuel Grade Label Shown

In all other markets Ethanol up to E25 (25% Ethanol) may be used.

Engine Calibration

In certain circumstances engine calibration may be required. This should be completed by a competent person with the specialist knowledge and technical understanding of motorcycles, such as an authorised Triumph dealer.

NOTICE

The motorcycle can be permanently damaged if it is allowed to operate with the incorrect grade of fuel or incorrect engine calibration.

Always make sure that the fuel used is of the correct grade and quality.

Damage caused by using the incorrect fuel or engine calibration is not considered a manufacturing defect, and will not be covered under warranty.

NOTICE

In many countries, the exhaust system for this model is fitted with a catalytic converter to help reduce exhaust emission levels.

Use of leaded fuel will damage the catalytic converter. In addition, the catalytic converter can be permanently damaged if the motorcycle is allowed to run out of fuel or if the fuel level is allowed to get very low.

Always make sure you have adequate fuel for your journey.

NOTICE

The use of leaded fuel is illegal in some countries, states or territories.

NOTICE

If detonation ('knocking' or 'pinging') occurs at a steady engine speed under normal load, use a different brand of gasoline or gasoline that has a higher octane rating.

Oxygenated Gasoline

To help in meeting clean air standards, some areas of the U.S. use oxygenated gasoline to help reduce harmful emissions. These gasolines are a blend of conventional gasoline and another compound, such as alcohol. This Triumph motorcycle will give its best performance when using unleaded gasoline. However, the following should be used as a guide if you use any oxygenated fuels.

Ethanol

Ethanol fuel is a mixture of 10% Ethanol and 90% gasoline and is often described under the names 'gasohol', 'Ethanol enhanced', or 'contains Ethanol'. This fuel may be used in your Triumph motorcycle.

MTBE (Methyl Tertiary Butyl Ether)

The use of gasolines containing up to 15% MTBE (Methyl Tertiary Butyl Ether) is permitted in this Triumph motorcycle.

Methanol

Fuels containing methanol should not be used as damage to components in the fuel system can be caused by contact with methanol.

NOTICE

Because of the generally higher volatility of oxygenated fuels, starting, engine response and fuel consumption may be adversely affected by their use. Should any of these difficulties be experienced, run the motorcycle on normal unleaded gasoline.

Refuelling

⚠ WARNING

To help reduce hazards associated with refuelling, always observe the following fuel safety instructions:

- Petrol (fuel) is highly flammable and can be explosive under certain conditions. When refuelling, turn the ignition switch to the OFF position.

- Do not smoke.

- Do not use a mobile telephone.

- Make sure that the refuelling area is well ventilated and free from any source of flame or sparks. This includes any appliance with a pilot light.

- Pay full attention and remain alert while refuelling.

- Never fill the tank until the fuel level rises into the filler neck. Heat from sunlight or other sources may cause the fuel to expand and overflow creating a fire hazard.

- After refuelling always check that the fuel filler cap is correctly closed.

- Because petrol (fuel) is highly flammable, any fuel leak or spillage, or any failure to observe the safety advice given above will lead to a fire hazard, which could cause damage to property, serious injury or death.

NOTICE

Avoid filling the tank in rainy or dusty conditions where airborne material can contaminate the fuel.

Contaminated fuel may cause damage to fuel system components.

Fuel Tank Cap

Speed 400, Scrambler 400 X, Scrambler 400 XC and Tracker 400

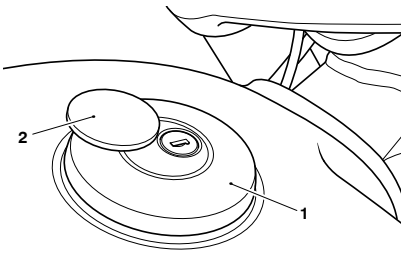

cldk

1. **Fuel tank cap**
2. **Cap cover**

To open the fuel tank cap:

- Slide the cap cover to the side to show the key lock.
- Insert the key into the lock and turn the key clockwise.
- Lift the cap clear of the tank filler neck.

To close the fuel tank cap:

- Turn the key clockwise before pushing the cap back into the tank filler neck.
- Turn the key anticlockwise to lock and withdraw the key.
- Slide the cap cover back into place to hide the lock.

Thruxton 400

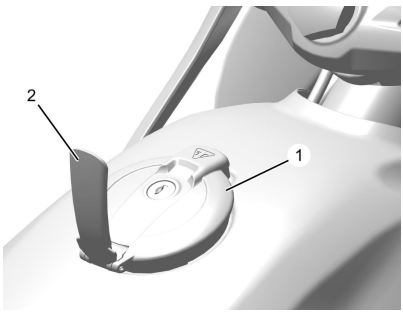

1. **Fuel tank cap**
2. **Cap cover**

To open the fuel tank cap:

- Lift the cap cover to show the key lock.
- Insert the key into the lock and turn the key clockwise.
- Lift the cap clear of the tank filler neck.

To close the fuel tank cap:

- Turn the key clockwise before pushing the cap back into the tank filler neck.
- Turn the key anticlockwise to lock and withdraw the key.
- Put down the cap cover into place to hide the lock.

Filling the Fuel Tank

Fill the fuel tank slowly to help prevent spillage. Do not fill the tank to a level above the bottom of the filler neck. This will make sure there is enough air space to allow for fuel expansion if the fuel inside the tank expands through absorption of heat from the engine or from direct sunlight.

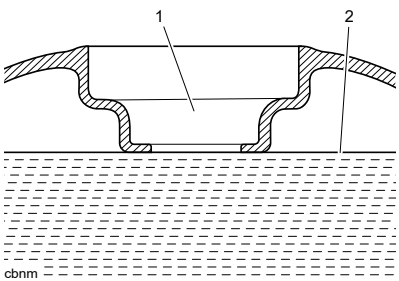

1. **Fuel filler neck**
2. **Maximum fuel level**

After refuelling always check that the fuel tank cap is correctly closed.

Traction Control (TC)

⚠ WARNING

The traction control system is not a substitute for riding appropriately for the prevailing surface and weather conditions. The system cannot prevent loss of traction due to; excessive speed when entering turns, accelerating at a sharp lean angle and braking.

Traction control cannot prevent the front wheel from slipping.

Failure to follow the advice above may lead to loss of motorcycle control, which could result in serious injury or death.

NOTICE

Traction control will not function if there is a malfunction with the ABS. The warning lights for the ABS, traction control and the MIL will be illuminated.

Traction Control (TC) is a system that helps to maintain traction when accelerating on wet/slippery road surfaces. If sensors detect that the rear wheel is losing traction (slipping), the traction control system will engage and alter the engine power until traction to the rear wheel has been restored.

The traction control indicator light will flash while the system is engaged and the rider may notice a change to the sound of the engine.

NOTICE

Scrambler 400 X and Scrambler 400 XC only: Traction control is switched off when in off-road mode.

Traction Control Settings

⚠ WARNING

Do not attempt to adjust the traction control settings while the motorcycle is in motion.

Adjusting the traction control settings while riding the motorcycle is dangerous.

Failure to follow the advice above may lead to loss of motorcycle control, which could result in serious injury or death.

⚠ WARNING

If the traction control is disabled, the motorcycle will handle as normal but without traction control.

In this situation, accelerating too hard on wet/slippery road surfaces may cause the rear wheel to slip.

Failure to follow the advice above may lead to loss of motorcycle control, which could result in serious injury or death.

The traction control system can be set to one of the following conditions:

ON	Optimal traction control setting for road use, allows minimal rear wheel slip.
OFF	Traction control is turned OFF. The TC disabled warning light will be illuminated (see page 41).

The traction control defaults to ON after the ignition has been switched OFF and then switched ON again.

To Disable the Traction Control

⚠ WARNING

After riding off-road with traction control disabled, always make sure that the traction control is enabled when returning to ride on public roads.

Riding on public roads with the traction control disabled may, if accelerating too hard on wet/slippery road surfaces, cause the rear wheel to slip.

Failure to follow the advice above may lead to loss of motorcycle control, which could result in serious injury or death.

For more information on disabling and enabling traction control, see page 49.

Side Stand

⚠ WARNING

The motorcycle is fitted with an interlock system to prevent it from being ridden with the side stand in the down position.

Never attempt to ride with the side stand down or interfere with the interlock mechanism, as this will cause a dangerous riding condition.

Failure to follow the advice above may lead to loss of motorcycle control, which could result in serious injury or death.

⚠ CAUTION

Do not lean, sit or climb on the motorcycle when it is supported on the side stand.

This may cause the motorcycle to fall over, or cause severe damage to the side stand or motorcycle frame.

Failure to follow the advice above could result in minor to moderate injury.

The motorcycle is equipped with a side stand on which it can be parked. When using the side stand, always turn the handlebars fully to the left and leave the motorcycle in first gear.

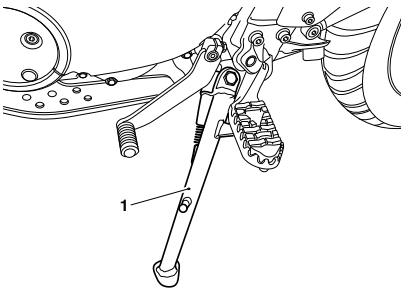

1. Side stand (Scrambler 400 X shown)

Whenever the side stand is used, before riding, always make sure that the stand is fully up after first sitting on the motorcycle.

For instructions on safe parking, refer to the 'How to Ride the Motorcycle' section.

Side Panels

Side Panels - Removal

WARNING

Make sure that the motorcycle is stabilised and adequately supported.

Do not support the motorcycle on any ancillary component, the exhaust system or any other non-structural parts of the motorcycle frame.

A correctly supported motorcycle will help prevent it from falling.

Failure to follow the advice above could result in serious injury or death.

NOTICE

The left infill panel removal is show. The procedure for the right side is the same.

- Grasp the rear of the infill panel firmly and pull away from the motorcycle until it is free from the grommet (leaving the grommet in place).
- Slide the infill panel forward until it is free from the retaining feature.

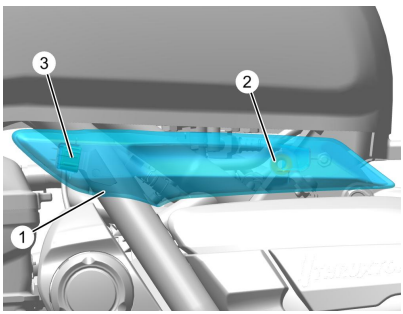

1. **Infill panel (left hand side shown)**
2. **Grommet**
3. **Retaining feature**

- Remove the seat for the Speed 400, Thruxton 400 and Tracker 400. Remove the rider and passenger seats for Scrambler 400 X and Scrambler 400 XC, see page 80.

Thruxton 400

- Remove the fixings at the top of the left and right hand side panel.

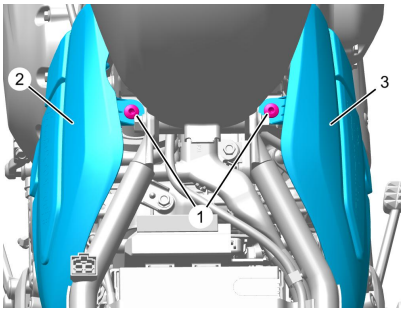

1. **Fixings**
2. **Left hand side panel**
3. **Right hand side panel**

Left Hand Side Panel

To remove the left hand side panel:

- Grasp the left hand side panel firmly and pull the panel away from the motorcycle until it is free from the two retaining grommets (leaving the grommets in place).
- Lift the side panel upwards to remove from the lower hook.

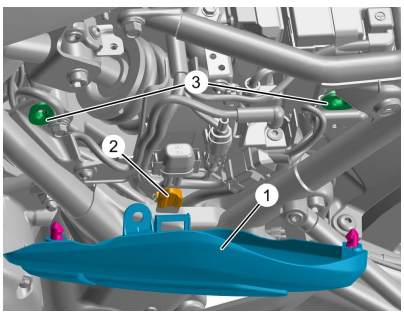

1. **Side panel (Thruxton 400 shown)**
2. **Lower hook**
3. **Grommets**

Right Hand Side Panel

To remove the right hand side panel:

- Grasp the panel firmly and pull the panel away from the motorcycle until it is free from the two retaining grommets (leaving the grommets in place).
- Lift the side panel upwards to remove from the lower hook.

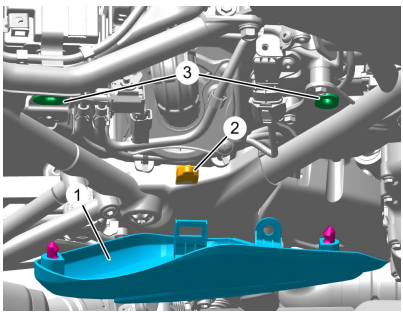

1. **Side panel (Thruxton 400 shown)**
2. **Lower hook**
3. **Grommets**

- Remove the seat for the Speed 400, Thruxton 400 and Tracker 400. Remove the rider and passenger seats for Scrambler 400 X and Scrambler 400 XC, see page 80.

Speed 400, Scrambler 400 X and Scrambler 400 XC

- Remove the fixings at the top of both side panels.

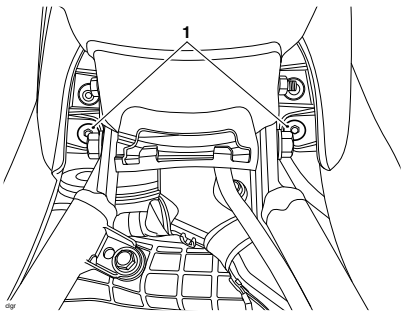

cigr

1. **Fixings**

Left Hand Side Panel

To remove the left hand side panel:

- Grasp the panel firmly and pull the panel away from the motorcycle until it is free from the two retaining grommets (leaving the grommets in place).
- Lift the side panel upwards to remove from the lower hook.

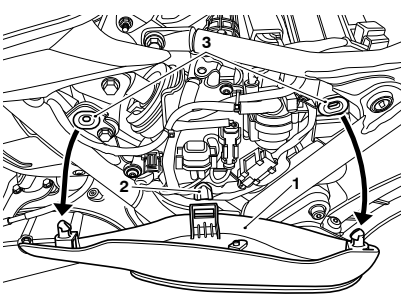

clec

1. **Side panel (Scrambler 400 X shown)**
2. **Hook**
3. **Grommets**

Right Hand Side Panel

To remove the right hand side panel:

- Grasp the panel firmly and pull the panel away from the motorcycle until it is free from the two retaining grommets (leaving the grommets in place).
- Lift the side panel upwards to remove from the lower hook.

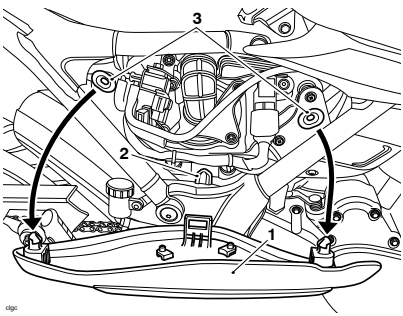

clgc

1. **Side panel (Scrambler 400 X shown)**
2. **Hook**
3. **Grommets**

- Remove the seat for the Speed 400, Thruxton 400 and Tracker 400. Remove the rider and passenger seats for Scrambler 400 X and Scrambler 400 XC, see page 80.

Tracker 400

NOTICE

The side panel assembly is made up of the side panel, the number board panel and the lock housing panel.

- Remove the fixings securing the side panel to the frame.

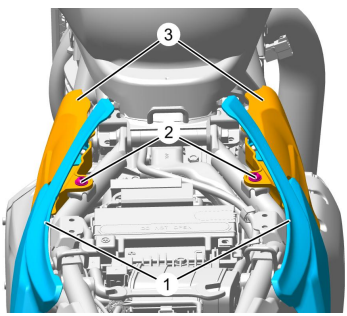

1. **Number board panel**
2. **Fixing**
3. **Side panel**

Left Hand Side Removal

To remove the left hand side panel:

- Remove the centre fixing from the lock support panel on the inside of the number board panel.

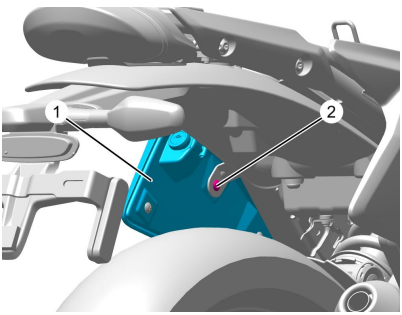

1. **Number board panel**
2. **Fixing**

- Lift the side panel assembly up to release it from the frame retaining feature.

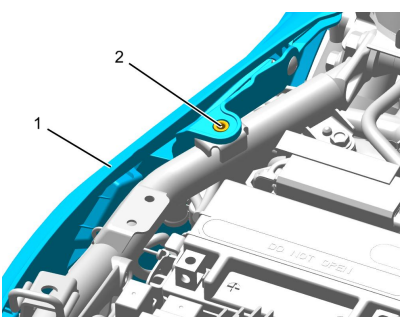

1. **Side panel assembly**
2. **Retaining feature**

- Grasp the side panel assembly firmly and pull the panels away from the motorcycle until it is free from the retaining grommet (leave the grommet in place).
- Lift the panel assembly upwards to remove from the lower retaining feature, making sure the side panel assembly is supported.

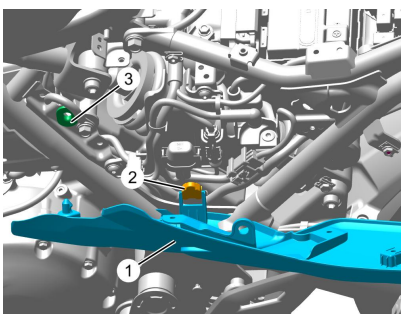

1. **Side panel assembly**
2. **Lower retaining feature**
3. **Grommet**

NOTICE

Once removed from the motorcycle, make sure the side panel assembly is supported close to the motorcycle to prevent damage to the seat lock cable and the lock cable housing.

Right Hand Side Panel

To remove the right hand side panel:

- Remove the centre fixing from the lock support panel on the inside of the number board panel.

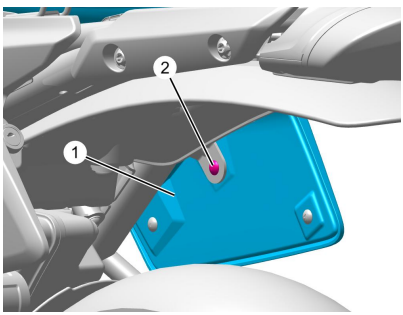

1. **Number board panel**
2. **Fixing**

- Lift the side panel assembly up to release it from the frame retaining feature.

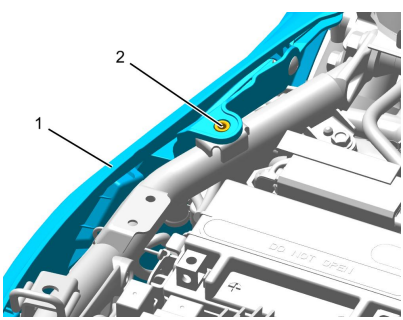

1. **Side panel assembly**
2. **Retaining feature**

- Grasp the side panel assembly firmly and pull the panels away from the motorcycle until it is free from the retaining grommet (leave the grommet in place).
- Lift the panel assembly upwards to remove from the lower retaining feature.

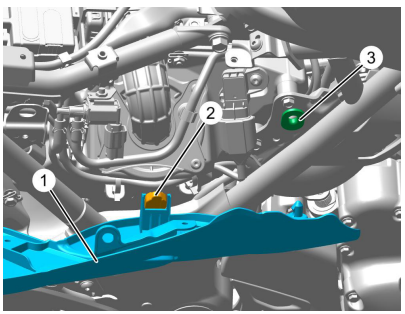

1. **Side panel assembly**
2. **Lower retaining feature**
3. **Grommet**

Side Panel - Installation

⚠ WARNING

Make sure that the motorcycle is stabilised and adequately supported.

Do not support the motorcycle on any ancillary component, the exhaust system or any other non-structural parts of the motorcycle frame.

A correctly supported motorcycle will help prevent it from falling.

Failure to follow the advice above could result in serious injury or death.

Thruxton 400

Left Hand Side Panel

To install the left hand side panel:

- Position the bottom of the side panel onto the lower hook.
- Position the two locating dowels to the grommets, then press firmly to secure the panel.

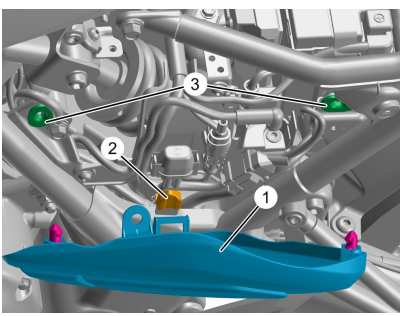

1. **Side panel (Thruxton 400 shown)**
2. **Left hand side panel**
3. **Lower hook**
4. **Grommets**

Right Hand Side Panel

To install the right hand side panel:

- Position the bottom of the side panel onto the lower hook.
- Position the two locating dowels to the grommets, then press firmly to secure the panel.

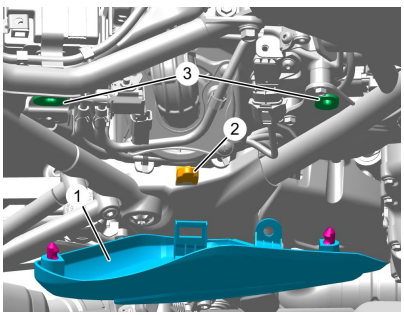

1. **Side panel (Thruxton 400 shown)**
2. **Right hand side panel**
3. **Lower hook**
4. **Grommets**

- Fit the fixings at the top of both side panels and tighten to .

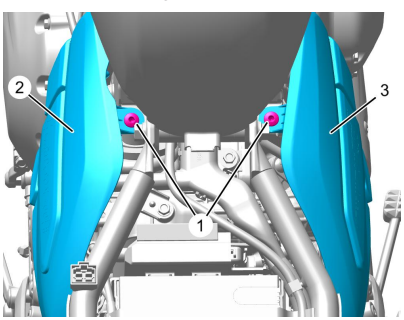

1. **Fixings**
2. **Left hand side panel**
3. **Right hand side panel**

Thruxton 400

NOTICE

The left infill panel installation is show. The procedure for the right side is the same.

- Position the front of the infill panel onto the retaining feature and slide towards the rear of the motorcycle.
- Position the locating dowel to the grommet, then press it firmly to secure the panel.

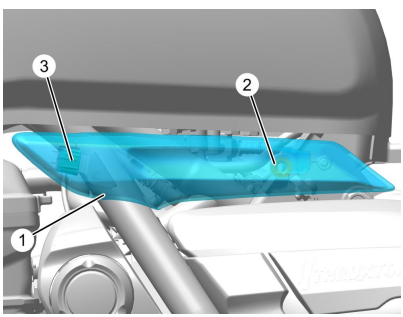

1. **Infill panel**
2. **Grommet**
3. **Retaining feature**

- Grasp the panel to make sure it is fully retained.

Speed 400, Scrambler 400 X and Scrambler 400 XC

Left Hand Side Panel

To install the left hand side panel:

- Position the bottom of the side panel onto the lower hook.
- Position the two locating dowels to the grommets, then press firmly to secure the panel.
- Install the fixing at the top of the side panel and tighten to 4.5 Nm.
- Finally, grasp the panel and make sure it is fully retained.

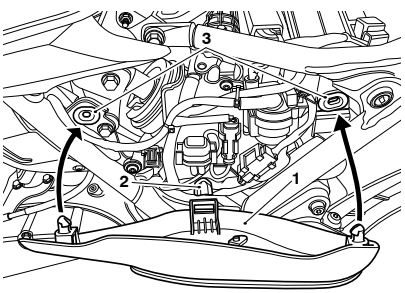

clec_1

1. **Side panel (Scrambler 400 X shown)**
2. **Hook**
3. **Grommets**

Right Hand Side Panel

To install the right hand side panel:

- Position the bottom of the side panel onto the lower hook.
- Position the two locating dowels to the grommets, then press firmly to secure the panel.
- Install the fixing at the top of the side panel and tighten to 4.5 Nm.
- Finally, grasp the panel and make sure it is fully retained.

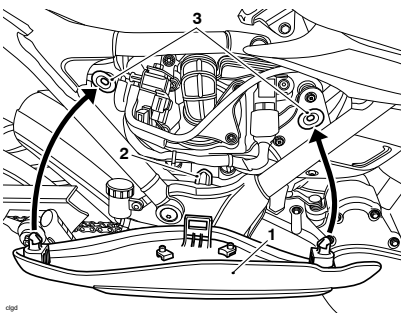

clgd

1. **Side panel (Scrambler 400 X shown)**
2. **Hook**
3. **Grommets**

- Fit the fixings at the top of both side panels and tighten to .

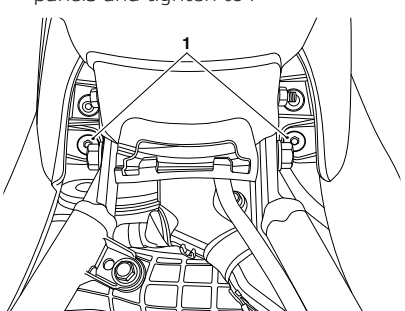

clgr

1. **Fixings**

Tracker 400

Left Hand Side Panel

To install the left hand side panel:

- Position the bottom of the side panel onto the lower hook.
- Position the locating dowels to the grommet, then press firmly to secure the panel.

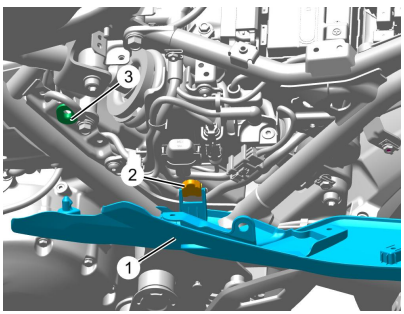

1. **Side panel assembly**
2. **Lower retaining feature**
3. **Grommet**

- Lift the side panel assembly up and fit it to the frame retaining feature.

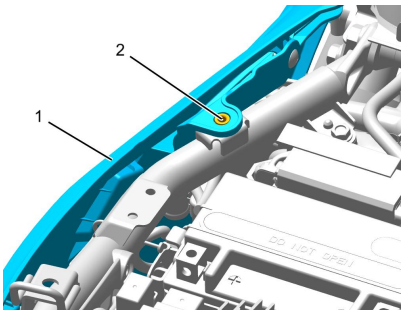

1. **Side panel assembly**
2. **Retaining feature**

- Fit the fixing to the frame retaining feature and tighten to 4.5 Nm.
- Refit the centre fixing from the lock support panel on the inside of the number board panel. Tighten the fixing to XXNm.

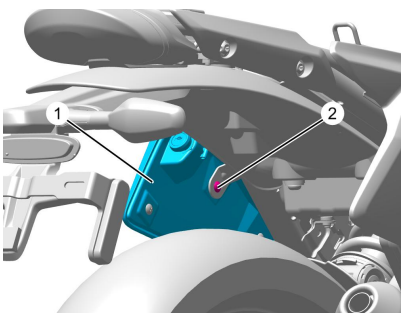

1. **Number board panel**
2. **Fixing**

Right Hand Side Panel

To install the right hand side panel:

- Position the bottom of the side panel onto the lower hook.
- Position the locating dowel to the grommet, then press firmly to secure the panel.

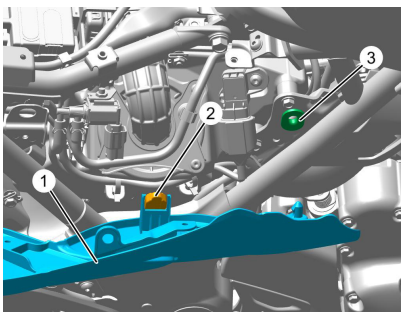

1. **Side panel assembly**
2. **Lower retaining feature**
3. **Grommet**

- Lift the side panel assembly up and fit it to the frame retaining feature.

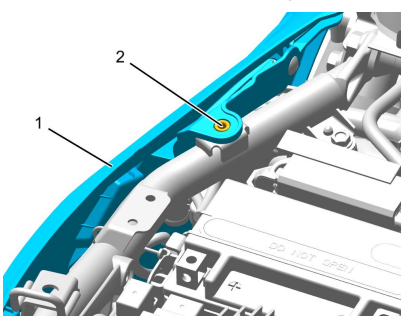

1. **Side panel assembly**
2. **Retaining feature**

- Fit the fixing to the frame retaining feature and tighten to 4.5 Nm.
- Refit the centre fixing from the lock support panel on the inside of the number board panel. Tighten the fixing to XXNm.

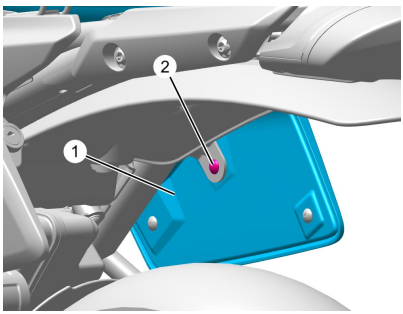

1. **Number board panel**
2. **Fixing**

- Refit the seat for the Speed 400, the Thruxton 400 and the Tracker 400. Refit the rider and passenger seats for Scrambler 400 X and Scrambler 400 XC, see page 82.

Seats

Seat Care

For seat cleaning information, see page 185.

Seat Lock

⚠ WARNING

To prevent detachment of the seat during riding, after fitting always grasp the seat and pull firmly upwards.

If the seat is not correctly secured in the lock, it will detach from the lock.

A loose or detached seat may lead to loss of motorcycle control which could result in serious injury or death.

NOTICE

The motorcycle must not be ridden with the key in the seat lock.

Always lock the seat and remove the key before riding the motorcycle.

The seat lock is located on the left hand side of the motorcycle, on the frame below the seat.

Speed 400, Scrambler 400 X, Scrambler 400 XC and Thruxton 400

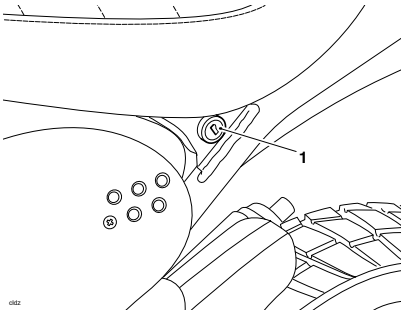

1. Seat lock (Scrambler 400 X shown)

Tracker 400

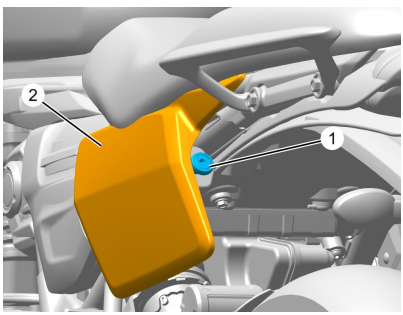

1. Seat lock
2. Number board panel

The seat can be removed to gain access to the battery and fuse box 1.

Seat - Removal

⚠ WARNING

Make sure that the motorcycle is stabilised and adequately supported.

Do not support the motorcycle on any ancillary component, the exhaust system or any other non-structural parts of the motorcycle frame.

A correctly supported motorcycle will help prevent it from falling.

Failure to follow the advice above could result in serious injury or death.

NOTICE

To prevent damage to the seats or seat covers, care must be taken not to drop the seats.

Do not lean the seats against the motorcycle or any surface that may damage the seats or seat covers. Instead, place the seats, with the seat cover facing upwards, on a clean, flat surface, which is covered with a soft cloth.

Do not place any item on the seats, which may cause damage or staining to the seat covers.

Speed 400 and Thruxton 400

Seat

- Insert the ignition key into the seat lock.
- Turn the ignition key clockwise while pressing down on the rear of the seat. This will release the seat from its lock.
- Lift the seat up from the back and slide rearwards for complete removal from the motorcycle.

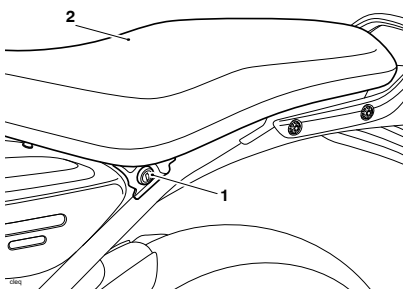

1. **Seat lock**
2. **Seat**

Scrambler 400 X and Scrambler 400 XC

Passenger Seat

NOTICE

The passenger seat must be removed before removing the rider's seat.

- Insert the ignition key into the seat lock.
- Turn the ignition key clockwise while pressing down on the rear of the seat. This will release the passenger seat from its lock.
- Lift the seat up from the back and slide rearwards for complete removal from the motorcycle.

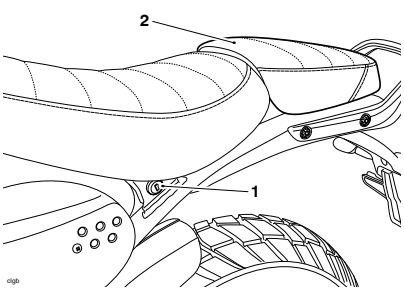

1. **Seat lock**
2. **Passenger seat**

Rider's Seat

- Remove the passenger seat as described above.
- Remove the fixings at the rear of the seat.
- Lift the seat up from the back and slide rearwards for complete removal from the motorcycle.

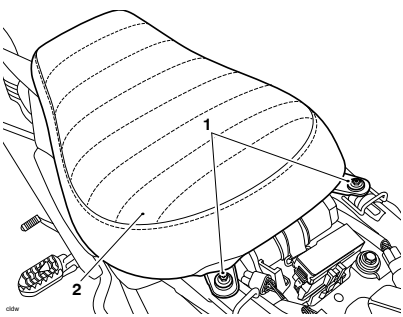

1. **Fixings**
2. **Rider's seat**

Tracker 400

Seat

- Insert the ignition key into the seat lock. The seat lock is behind the number board panel.
- Turn the ignition key anti-clockwise while pressing down on the rear of the seat. This will release the seat from its lock.
- Lift the seat up from the back and slide rearwards for complete removal from the motorcycle.

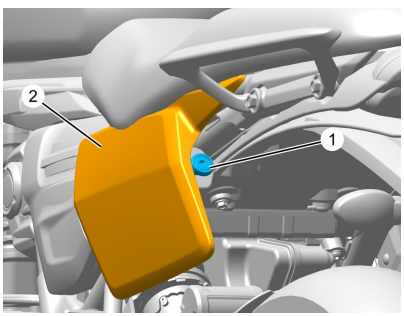

1. Seat lock
2. Number board panel

Seat - Installation

⚠ WARNING

Make sure that the motorcycle is stabilised and adequately supported.

Do not support the motorcycle on any ancillary component, the exhaust system or any other non-structural parts of the motorcycle frame.

A correctly supported motorcycle will help prevent it from falling.

Failure to follow the advice above could result in serious injury or death.

Speed 400

Seat

- Engage the hook at the front of the seat under the bracket at the rear of the fuel tank.

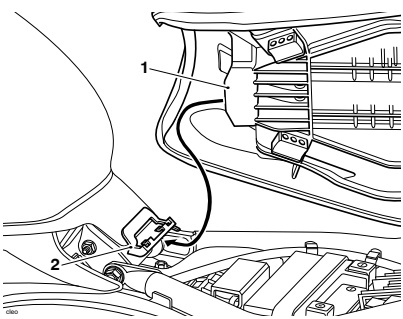

1. Hook
2. Bracket

- Align the locating peg into the lock and press down engaging the seat lock.

NOTICE

An audible click can be heard when the seat is fully engaged in its lock.

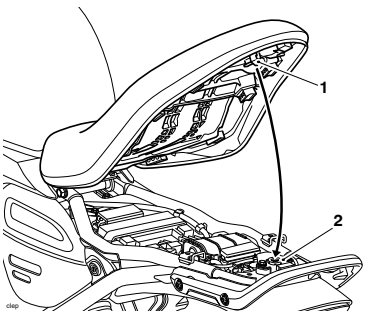

1. **Locating peg**
2. **Lock**

⚠ WARNING

To prevent detachment of the seat during riding, after fitting always grasp the seat and pull firmly upwards.

If the seat is not correctly secured in the lock, it will detach from the lock.

A loose or detached seat may lead to loss of motorcycle control which could result in serious injury or death.

- Grasp the seat and pull firmly upwards to make sure it is securely retained.

Scrambler 400 X and Scrambler 400 XC

Rider's Seat

- Engage the hook at the front of the seat under the bracket at the rear of the fuel tank.

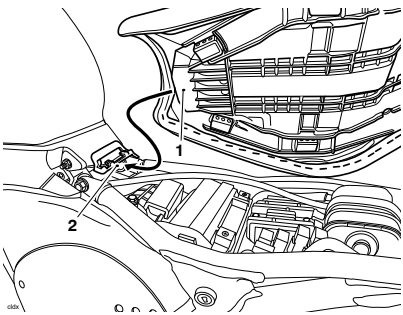

1. **Hook**
2. **Bracket**

- Lower the rear of seat and align the holes for the fixings.
- Install the fixings at the rear of the seat and tighten to 4.5 Nm.

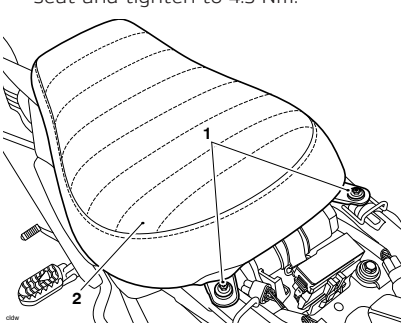

1. **Fixings**
2. **Rider's seat**

⚠ WARNING

Never ride the motorcycle with the fixings loose or removed, as the rider's seat will not be secure and can move.

The rider's seat is only correctly retained and supported when the fixings are correctly tightened.

A loose or detached seat may lead to loss of motorcycle control which could result in serious injury or death.

- Grasp the seat and pull firmly upwards to make sure it is securely retained.
- Install the passenger seat as follows.

Passenger Seat

- Engage the two hooks at the front of the seat under the two loops on the subframe.
- Align the locating peg into the lock and press down engaging the seat lock.

NOTICE

An audible click can be heard when the seat is fully engaged in its lock.

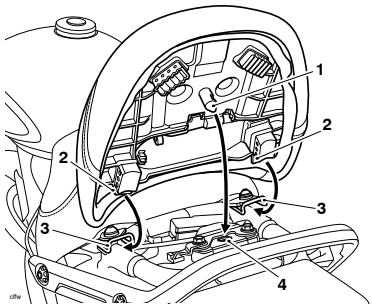

1. **Locating peg**
2. **Hooks**
3. **Loops**
4. **Lock**

⚠ WARNING

Never ride the motorcycle with the passenger seat detached or removed.

To prevent detachment of the seat during riding, after fitting always grasp the seat and pull firmly upwards.

If the seat is not correctly secured it will detach from the lock. A loose or detached seat may lead to loss of motorcycle control which could result in serious injury or death.

- Grasp the seat and pull firmly upwards to make sure it is securely retained.

Thruxton 400 and Tracker 400

Seat

- Identify the bracket under the rear of the fuel tank and the two hooks on the frame.
- On the underside of the seat identify the hook at the front of the seat, and the bracket with hooks to the rear of the seat.
- Align the seat so the seat hooks align with the brackets on the frame, as shown in the illustration below.

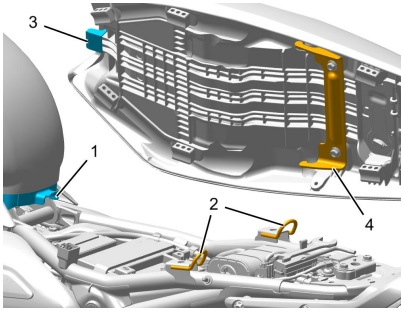

1. **Bracket**
2. **Hooks, frame**
3. **Seat hook, front**
4. **Seat hook, rear**

- Fit the locating peg into the seat lock and press down to secure the seat to the motorcycle.

NOTICE

An audible click can be heard when the seat is fully engaged in its lock.

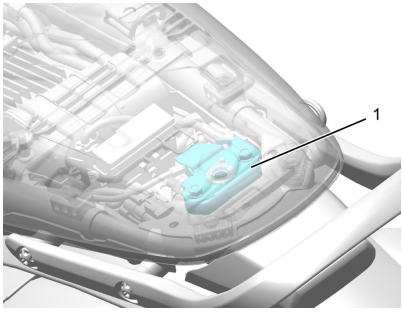

1. **Seat lock**

⚠ WARNING

To prevent detachment of the seat during riding, after fitting always grasp the seat and pull firmly upwards.

If the seat is not correctly secured in the lock, it will detach from the lock.

A loose or detached seat may lead to loss of motorcycle control which could result in serious injury or death.

- Grasp the seat and pull firmly upwards to make sure it is securely retained.

Owner's Handbook and Tool Kit

Owner's Handbook/Quick Start Guide

The Owner's Handbook or Quick Start Guide is supplied with the motorcycle.

Tool Kit

The tool kit is located on the underside of the seat.

The tool kit includes a:

- 17 mm spanner (Scrambler 400 X and Scrambler 400 XC only)
- Combination 5 mm Allen key and screwdriver
- Rear suspension unit spring preload adjustment tool (not stored in tool kit).

Universal Serial Bus (USB) Socket

DANGER

Do not use a mobile phone or adjust any GPS device while the motorcycle is in motion.

Telephone calls, texting or any attempt to use your mobile device for any purpose while riding the motorcycle is dangerous.

Failure to follow the advice above will result in serious injury or death.

WARNING

Make sure that all electronic devices and adaptor cables are safely secured when riding. Check adaptor cables do not bind or restrict the operation of the steering and other controls.

Electronic devices and adaptor cables that are not secure may restrict the movement of the steering and affect the handling, stability or other aspects of the motorcycle's operation.

Any electronic devices or adaptor cables that will restrict the steering and other controls may lead to loss of motorcycle control which could result in serious injury or death.

NOTICE

The USB socket is susceptible to water ingress with the cover open. Do not connect adaptor cables to the USB socket while it is raining or in wet conditions.

Water in the USB socket could lead to corrosion which may adversely affect the function of the device.

NOTICE

Do not leave the ignition switch in the ON position unless the engine is running as this will discharge the battery.

The Universal Serial Bus (USB) socket allows a 5 Volt USB-C connection for charging electronic devices such as mobile phones, cameras and GPS devices.

Loads up to a maximum of 2.4 Amps can be connected to the USB-C socket.

Speed 400, Scrambler 400 X and Scrambler 400 XC

To access the USB-C socket:

- The USB-C socket is located on the right hand side, adjacent to the ignition switch and above the headlight.
- Remove the cover.

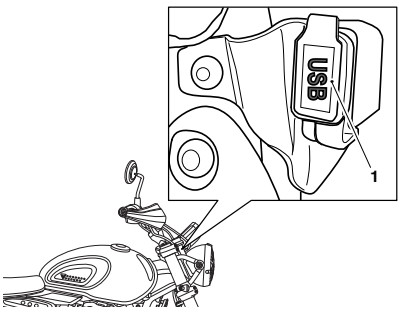

1. **USB-C socket (Scrambler 400 X shown)**

- Plug the USB-C adaptor cable into the socket.

NOTICE

Adaptor cables are not supplied with the motorcycle.

- Always fit the cover when disconnecting the adapter cable to avoid water ingress.

Tracker 400

To access the USB-C socket:

- The USB-C socket is located on the right hand side, adjacent to the ignition switch and above the headlight.
- Remove the cover.

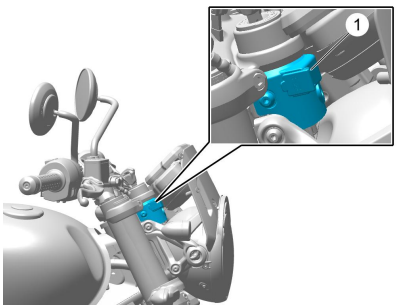

1. **USB-C socket**

- Plug the USB-C adaptor cable into the socket.

NOTICE

Adaptor cables are not supplied with the motorcycle.

- Always fit the cover when disconnecting the adapter cable to avoid water ingress.

Thruxton 400

To access the USB-C socket:

- The USB-C socket is located on the left hand side, adjacent to the ignition switch and above the headlight.
- Remove the cover.

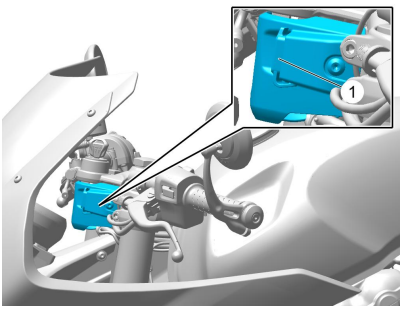

1. **USB-C socket**

- Plug the USB-C adaptor cable into the socket.

NOTICE

Adaptor cables are not supplied with the motorcycle.

- Always fit the cover when disconnecting the adapter cable to avoid water ingress.

Charging Electronic Devices

When charging an electronic device using the USB socket note the following:

- Make sure the device is secured while riding the motorcycle to avoid loss or damage to the device.
- Make sure the device is protected against water damage.
- If carrying the device in a pocket, rucksack or luggage, take care not to damage the device or adaptor cable when dismounting the motorcycle. Disconnect the device before dismounting.
- Make sure the adaptor cable is an appropriate length. Avoid cables that are either too long or too short.

Triumph does not accept any liability whatsoever for loss or damage to any electronic devices when using the USB socket.

Running-In

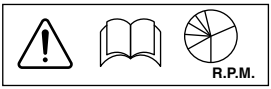

Running-in is the name given to the process that occurs during the first hours of a new vehicle's operation.

In particular, internal friction in the engine will be higher when components are new. Later on, when continued operation of the engine has ensured that the components have 'bedded in', this internal friction will be greatly reduced.

A period of careful running-in will ensure lower exhaust emissions, and will optimise performance, fuel economy and longevity of the engine and other motorcycle components.

During the first 600 miles (1,000 km):

- Do not use full throttle
- Avoid high engine speeds at all times
- Avoid riding at one constant engine speed, whether fast or slow, for a long period of time
- Avoid aggressive starts, stops, and rapid accelerations, except in an emergency
- Do not ride at engine speeds greater than 6,500 rpm. The tachometer will flash when the engine speed reaches 6,500 rpm and above.

From 600 to 1,000 miles (1,000 to 1,500 km):

- Engine speed can gradually be increased to the maximum engine speed for short periods.

Both during and after running-in has been completed:

- Do not over-rev the engine when cold
- Do not let the engine labour. Always downshift before the engine begins to 'struggle'
- Do not ride with engine speeds unnecessarily high. Changing up a gear helps reduce fuel consumption, reduces noise and helps to protect the environment.

Daily Safety Checks



⚠ WARNING

Always perform the daily safety checks every day before you ride the motorcycle.

Failure to perform these daily safety checks may lead to loss of motorcycle control which could result in motorcycle damage, serious injury or death.

Check the following items each day before you ride. The time required is minimal, and these checks will help ensure a safe, reliable ride.

If any doubt exists, refer to the Maintenance section or contact a competent person with the specialist knowledge and technical understanding of motorcycles, such as an authorised Triumph dealer.

Check:

Fuel: Adequate supply in tank, no fuel leaks (see page 62).

Engine Oil: Correct level on dipstick or shown in sight glass. Add correct specification oil as required. No leaks from the engine or oil cooler (see page 120).

Drive Chain: Correct adjustment (see page 133).

Tyres/Wheels: Correct inflation pressures (when cold). Tread depth/ wear, tyre/wheel damage, loose/broken spokes, punctures etc. (see page 157).

Nuts, Bolts, Fasteners: Visually check that steering and suspension components, axles, and all controls are properly tightened or fastened. Inspect all areas for loose/damaged fixings.

Steering Action: Smooth but not loose from lock to lock. No binding of any of the control cables (see page 151).

Brakes: Pull the brake lever and push the brake pedal to check for correct resistance. Investigate any lever/pedal where the travel is excessive before meeting resistance, or if either control feels spongy in operation (see page 139).

Brake Pads: Check that the correct amount of friction material is remaining on all the brake pads (see page 140 and page 141).

Brake Fluid Levels: No brake fluid leakage. Brake fluid levels must be between the MAX and MIN marks on both reservoirs (see page 143 and page 146).

Front Forks: Smooth action. No fork oil leakage (see page 153).

Throttle: Make sure that the throttle grip returns to the idle position without sticking (see page 130).

Clutch: Smooth operation and correct cable free play (see page 131).

Coolant: No coolant leakage. Check the coolant level in the expansion tank (when the engine is cold) (see page 128).

Electrical Equipment: All lights and horn function correctly (see page 60).

Engine Stop: Engine run/stop switch turns the engine OFF when the switch is moved to the STOP position (see page 59).

Stands: Returns to the fully up position by spring tension. Return springs not weak or damaged (see page 68).

This page intentionally left blank

Table of Contents

Stopping the Engine 94
Starting the Engine 94
Moving Off 96
Changing Gears 96
Braking 97
    Anti-lock Braking System (ABS) 99
Parking 101
Considerations for High-Speed Operation 102

Stopping the Engine

⚠ WARNING

Do not stop the engine using the ignition switch or engine stop switch while the motorcycle is moving.

Always bring the motorcycle to a stop safely and engage Neutral gear prior to stopping the engine.

Stopping the engine by turning off the ignition or engine stop switch while the motorcycle is moving can lock the rear wheel, leading to loss of motorcycle control which could result in serious injury or death.

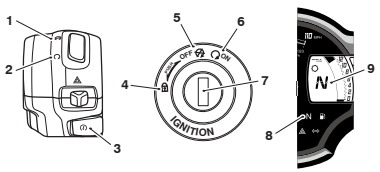

1. **STOP position**
2. **RUN position**
3. **START button**
4. **LOCK position**
5. **OFF position**
6. **ON position**
7. **Ignition switch**
8. **Neutral indicator light**
9. **Gear position display (neutral shown)**

- Close the throttle completely.
- Select neutral.
- Turn the ignition switch off.
- Select first gear.
- Position the motorcycle on a firm, level surface with the side stand (see page 101).
- Lock the steering (see page 56).

Starting the Engine

⚠ DANGER

Never start the engine or run the engine in a confined area.

Always operate the motorcycle in the open air or in an area with adequate ventilation.

Exhaust fumes are poisonous and will cause loss of consciousness and death within a short period of time.

NOTICE

Do not operate the starter continuously for more than five seconds as the starter motor will overheat and the battery will become discharged.

Wait 15 seconds between each operation of the starter to allow for cooling and recovery of battery power.

An engine that idles for long periods of time may lead to overheating, which will cause damage to the engine.

NOTICE

The low oil pressure warning light should go out shortly after the engine starts.

If the low oil pressure warning light remains on after starting the engine, stop the engine immediately and investigate the cause.

Running the engine with low oil pressure will cause severe engine damage.

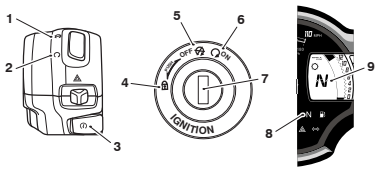

1. **STOP position**
2. **RUN position**
3. **START button**
4. **LOCK position**
5. **OFF position**
6. **ON position**
7. **Ignition switch**
8. **Neutral indicator light**
9. **Gear position display (neutral shown)**

- Check that the engine stop switch is in the RUN position.
- Make sure the transmission is in neutral.
- Turn the ignition switch on.

NOTICE

When the ignition is switched on, the instrument warning lights will illuminate and will then go off (except those which normally remain on until the engine starts, see page 37).

- Pull the clutch lever fully into the handlebar.
- Leaving the throttle fully closed, push the START button until the engine starts.
- The motorcycle is equipped with starter lockout switches. The switches prevent the electric starter from operating when the transmission is not in neutral with the side stand down.
- If the side stand is extended whilst the engine is running, and the transmission is not in neutral then the engine will stop regardless of the clutch lever position.

Moving Off

- Pull in the clutch lever and select first gear.
- Open the throttle a little and let out the clutch lever slowly.
- As the clutch starts to engage, open the throttle a little more, allowing enough engine speed to avoid stalling.

Changing Gears

⚠ WARNING

Take care to avoid opening the throttle too far or too fast in any of the lower gears, as this can lead to the front wheel lifting from the ground (pulling a 'wheelie') and to the rear tyre breaking traction (wheel spin).

Always open the throttle cautiously, particularly if you are unfamiliar with the motorcycle.

Pulling a 'wheelie' or loss of traction may lead to loss of motorcycle control which could result in serious injury or death.

⚠ WARNING

Do not change to a lower gear at speeds that will cause excessive engine rpm (r/min).

Changing down should be done such that low engine speeds will be ensured.

Changing to a lower gear at high speed can lock the rear wheel, leading to loss of motorcycle control which could result in serious injury or death.

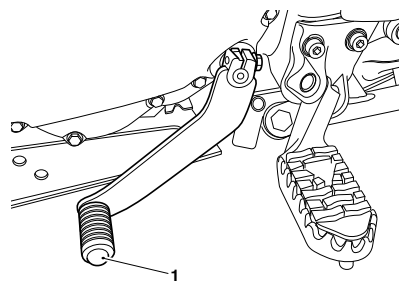

1. Gear change pedal (Scrambler 400 X shown)

- Close the throttle while pulling in the clutch lever.
- Change into the next higher or lower gear.
- Open the throttle part way, while releasing the clutch lever.
- Always use the clutch when changing gear.

NOTICE

The gear change mechanism is the 'positive stop' type. This means that, for each movement of the gear change pedal, you can only select each gear, one after the other, in ascending or descending order.

Braking

⚠ WARNING

WHEN BRAKING, OBSERVE THE FOLLOWING:

- Close the throttle completely, leaving the clutch engaged to allow the engine to help slow down the motorcycle.

- Change down one gear at a time such that the transmission is in first gear when the motorcycle comes to a complete stop.

- When stopping, always apply both brakes at the same time. Normally, the front brake should be applied a little more than the rear.

- Change down or fully disengage the clutch as necessary to keep the engine from stalling.

- Never lock the brakes, as this may cause loss of control of the motorcycle.

Failure to follow the advice above could result in serious injury or death.

⚠ WARNING

For emergency braking, disregard down changing, and concentrate on applying the front and rear brakes as hard as possible without skidding.

Riders should practice emergency braking in a traffic-free area.

Triumph strongly recommends that all riders take a course of instruction, which includes advice on safe brake operation. Incorrect brake technique may lead to loss of motorcycle control, which could result in serious injury or death.

⚠ WARNING

For your safety, always exercise extreme caution when braking, accelerating or turning as any incautious action can cause loss of motorcycle control and an accident. Independent use of the front or rear brakes reduces overall braking performance. Extreme braking may cause either wheel to lock, reducing control of the motorcycle and causing an accident (see ABS warnings).

When possible, reduce speed or brake before entering a turn, as closing the throttle or braking in mid-turn may cause wheel slip, leading to loss of control.

When riding in wet or rainy conditions, or on loose surfaces, the ability to manoeuvre and stop will be reduced. All of your actions should be smooth under these conditions. Sudden acceleration, braking or turning may cause loss of motorcycle control.

Failure to follow the advice above may lead to loss of motorcycle control, which could result in serious injury or death.

⚠ WARNING

When descending a long, steep gradient or mountain pass, make use of the engine's braking effect by down changing and use both front and rear brakes intermittently.

Continuous brake application or use of the rear brake only can overheat the brakes and reduce their effectiveness.

Failure to follow the advice above may lead to loss of motorcycle control, which could result in serious injury or death.

⚠ WARNING

Riding with your foot on the brake pedal or your hands on the brake lever may actuate the brake light, giving a false indication to other road users.

It may also overheat the brake, reducing braking effectiveness.

Failure to follow the advice above may lead to loss of motorcycle control, which could result in serious injury or death.

⚠ WARNING

Do not coast with the engine switched off, and do not tow the motorcycle.

The transmission is pressure lubricated only when the engine is running.

Inadequate lubrication may cause damage or seizure of the transmission, leading to loss of motorcycle control, which could result in serious injury or death.

⚠ WARNING

When using the motorcycle on loose, wet or muddy roads, braking effectiveness will be reduced by dust, mud or moisture collecting on the brakes.

Always brake earlier in these conditions to make sure that brake surfaces are cleaned by the braking action.

Riding the motorcycle with brakes contaminated with dust, mud or moisture may lead to loss of motorcycle control, which could result in serious injury or death.

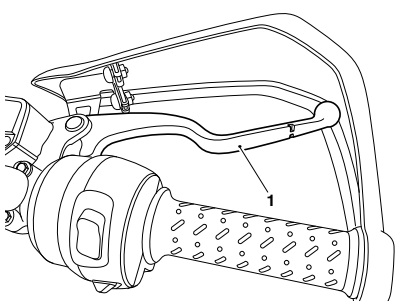

1. Front brake lever (Scrambler 400 X shown)

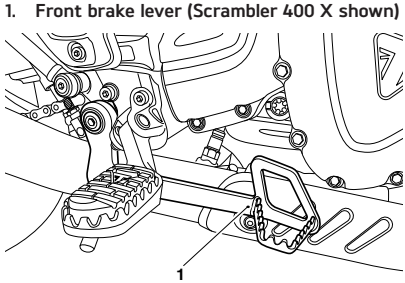

1. Rear brake pedal (Scrambler 400 X shown)

Anti-lock Braking System (ABS)

⚠ WARNING

The ABS function attempts to maximise the chances of keeping the motorcycle under control when braking. The potentially shorter braking distances ABS allows under certain conditions, are not a substitute for good riding practice.

Always ride within the legal speed limit.

Never ride without due care and attention and always reduce speed in consideration of weather, road and traffic conditions.

Under some circumstances it is possible that a motorcycle equipped with ABS may require a longer stopping distance.

Take care when cornering. If the brakes are applied in a corner, ABS will not be able to counteract the weight and momentum of the motorcycle.

Failure to follow the advice above may lead to loss of motorcycle control, which could result in serious injury or death.

⚠ WARNING

If the ABS is not functioning or has been disabled (off-road mode for Scrambler 400 X and Scrambler 400 XC only), the brake system will continue to function as a non-ABS braking system. Do not continue to ride for longer than is necessary with the ABS warning light illuminated.

In the event of a fault, contact a competent person with the specialist knowledge and technical understanding of motorcycles, such as an authorised Triumph dealer as soon as possible to have the fault checked and rectified.

Braking too hard will cause the wheels to lock, leading to loss of motorcycle control which could result in serious injury or death.

⚠ WARNING

After riding off-road with ABS disabled, always make sure that the ABS is enabled when returning to ride on public roads.

Riding on public roads with the ABS disabled will, if braking too hard, cause the wheels to lock.

Failure to follow the advice above may lead to loss of motorcycle control, which could result in serious injury or death.

⚠ WARNING

ABS operates by comparing the relative speed of the front and rear wheels.

Use of non-recommended tyres can affect wheel speed and cause the ABS not to operate. Always fit recommended tyres.

Failure to follow the advice above may lead to loss of motorcycle control, which could result in serious injury or death.

NOTICE

The ABS operation may feel like a harder pedal pressure or a pulsation of the brake lever and pedal.

The ABS is not an integrated braking system and does not control both the front and rear brake at the same time, so this pulsation may be felt in the lever, the pedal or both.

The ABS may be activated by sudden upward or downward changes in the road surface.

ABS Warning Light



When the ignition switch is turned to the ON position, it is normal that the ABS warning light will be illuminated. The light will remain on until the motorcycle first reaches a speed exceeding 6 mph (10 km/h) when it will go off.

The warning light will not illuminate again until the engine is restarted unless there is a fault, or the ABS is disabled by the rider (off-road mode for Scrambler 400 X and Scrambler 400 XC only).

Scrambler 400 X and Scrambler 400 XC only: If the ABS is disabled by the rider (off-road mode), the warning light will remain illuminated until the ABS is enabled again.

If there is a fault with the ABS system the warning light will be illuminated and the general warning symbol will flash.

NOTICE

The ABS warning light will illuminate when the rear wheel is driven at high speed for more than 30 seconds when the motorcycle is on a stand. This reaction is normal.

When the ignition is switched off and the motorcycle is restarted, the warning light will illuminate until the motorcycle reaches a speed exceeding 19 mph (30 km/h).

Parking

⚠ WARNING

Petrol is extremely flammable and can be explosive under certain conditions.

If parking inside a garage or other structure, be sure it is well ventilated and the motorcycle is not close to any source of flame or sparks. This includes any appliance with a pilot light.

Failure to follow the above advice may cause a fire resulting in damage to property, serious injury or death.

⚠ CAUTION

The engine and exhaust system will be hot after riding.

DO NOT park where pedestrians and children are likely to touch the motorcycle.

Touching any part of the engine or exhaust system when hot could result in minor to moderate injury.

⚠ CAUTION

Take care when parking on soft ground or on a steeply inclined surface.

Parking under these conditions may cause the motorcycle to fall over which could result in minor to moderate injury.

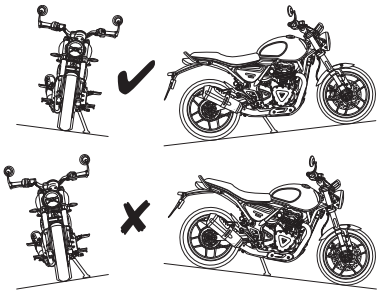

Speed 400 Shown

- Select neutral and turn the ignition switch to the OFF position.
- Lock the steering to help prevent theft.
- Always park on a firm, level surface to prevent the motorcycle from falling.
- When parking on a hill, always park facing uphill to prevent the motorcycle from rolling off the stand. Engage first gear to prevent the motorcycle from moving.
- On a lateral (sideways) incline, always park such that the incline naturally pushes the motorcycle towards the side stand.
- Do not park on a lateral (sideways) incline of greater than 6° and never park facing downhill.
- Make sure that the side stand is fully retracted before riding off.

Considerations for High-Speed Operation

⚠ WARNING

This motorcycle should be operated within the legal speed limits for the particular road travelled.

Riding a motorcycle at high speeds can be dangerous since the time available to react to a hazard is greatly reduced at high speeds.

Always reduce speed in potentially hazardous driving conditions, such as bad weather or heavy traffic.

Failure to follow the advice above may lead to loss of motorcycle control, which could result in serious injury or death.

⚠ WARNING

Only operate this motorcycle at high speed in closed-course, on-road competition or on closed-course racetracks.

High-speed operation should only then be attempted by riders who have been instructed in the techniques necessary for high-speed riding and are familiar with the motorcycle's characteristics in all conditions.

High-speed operation in any other circumstances is dangerous and may lead to loss of motorcycle control, which could result in serious injury or death.

⚠ WARNING

The handling characteristics of a motorcycle at high speed may vary from those you are familiar with at legal road speeds.

Do not attempt high-speed operation unless you have received sufficient training and have the required skills.

Failure to follow the advice above may lead to loss of motorcycle control, which could result in serious injury or death.

⚠ WARNING

The items listed below are extremely important and must never be neglected.

A problem, which may not be noticed at normal operating speeds, may be greatly exaggerated at high speeds.

Check the items listed below before any high-speed operation.

Failure to follow the advice above may lead to loss of motorcycle control, which could result in serious injury or death.

General

Make sure that the motorcycle has been maintained according to the scheduled maintenance chart.

Brakes

Check that the front and rear brakes are functioning correctly.

Coolant

Check that the coolant level in the expansion tank is correct. Always check the level when the engine is cold.

Electrical Equipment

Make sure that all electrical equipment such as the headlight, rear/brake light, direction indicators and horn all work correctly.

Engine Oil

Check that the engine oil level is correct. Make sure that the correct grade and type of oil is used when topping up.

Drive Chain

Make sure that the drive chain is correctly adjusted and lubricated. Inspect the chain for wear and damage.

Fuel

NOTICE

In many countries, the exhaust system for this model is fitted with a catalytic converter to help reduce exhaust emission levels.

Use of leaded fuel will damage the catalytic converter. In addition, the catalytic converter can be permanently damaged if the motorcycle is allowed to run out of fuel or if the fuel level is allowed to get very low.

Always make sure you have adequate fuel for your journey.

Have sufficient fuel for the increased fuel consumption that will result from high-speed operation.

Luggage

Make sure that any luggage containers are closed, locked and securely fitted to the motorcycle.

Miscellaneous

Visually check that all fixings are tight.

Steering

Check that the handlebar turns smoothly without excessive free play or tight spots. Make sure that the control cables do not restrict the steering in any way.

Tyres

High-speed operation is hard on tyres, and tyres that are in good condition are crucial to riding safely. Examine their overall condition, inflate to the correct pressure (when the tyres are cold), and check the wheel balance. Securely fit the valve caps after checking tyre pressures. Observe the information given in the Maintenance and Specification sections on tyre checking and tyre safety.

This page intentionally left blank

The addition of accessories and carriage of additional weight can affect the motorcycle's handling characteristics, causing changes in stability and necessitating a reduction in speed. The following information has been prepared as a guide to the potential hazards of adding accessories to a motorcycle and carrying passengers and additional loads.

Accessories

⚠ WARNING

Do not install accessories or carry luggage that impairs the control of the motorcycle.

Make sure that you have not adversely affected any lighting component, road clearance, banking capability (i.e. lean angle), control operation, wheel travel, front fork movement, visibility in any direction, or any other aspect of the motorcycle's operation.

Failure to follow the advice above may lead to loss of motorcycle control, which could result in serious injury or death.

⚠ WARNING

Fit only genuine Triumph accessories to the correct Triumph motorcycle model.

Always check the Triumph Fitting Instruction associated with the genuine Triumph accessory. Make sure the Triumph motorcycle model that the Triumph accessory is to be fitted to, is listed as approved for the genuine Triumph accessory. For all Triumph Fitting Instructions, see www.triumphinstructions.com.

Never fit genuine Triumph accessories to a Triumph motorcycle model that is not listed in the associated Triumph Fitting Instruction, as this may affect handling, stability or other aspects of the motorcycle's operation that may lead to loss of motorcycle control, which could result in serious injury or death.

⚠ WARNING

Owners should be aware that the only approved parts, accessories and conversions for any Triumph motorcycle are those that carry official Triumph approval.

We recommend accessories and conversions be completed by a competent person with the specialist knowledge and technical understanding of motorcycles, such as an authorised Triumph dealer.

In particular, it is extremely hazardous to fit or replace parts or accessories whose fitting requires the dismantling of, or addition to, either the electrical or fuel systems. Any such modification could cause a safety hazard.

The fitting of any non-approved parts, accessories or conversions may affect the handling, stability or other aspects of the motorcycle's operation, leading to loss of motorcycle control, which could result in serious injury or death.

Triumph does not accept any liability whatsoever for defects caused by the fitting of non-approved parts, accessories or conversions.

Triumph does not accept any liability whatsoever for defects caused by the incorrect fitment of approved parts, accessories or conversions.

⚠ WARNING

Never ride an accessory equipped motorcycle, or a motorcycle carrying a payload of any kind, at speeds above 80 mph (130 km/h). In either/both of these conditions, speeds in excess of 80 mph (130 km/h) should not be attempted, even where the legal speed limit permits this.

The presence of accessories and/or payload will cause changes in the stability and handling of the motorcycle.

Failure to allow for changes in motorcycle stability may lead to loss of motorcycle control. When riding at high speed, always be aware that various motorcycle configuration and environmental factors can adversely affect the stability of your motorcycle. For example:

- Incorrectly balanced loads on both sides of the motorcycle
- Incorrectly adjusted front and rear suspension settings
- Incorrectly adjusted tyre pressures
- Excessively or unevenly worn tyres
- Side winds and turbulence from other vehicles
- Loose clothing.

Remember that the 80 mph (130 km/h) absolute limit will be reduced by the fitting of non-approved accessories, incorrect loading, worn tyres, overall motorcycle condition and poor road or weather conditions.

Failure to follow the advice above may lead to loss of motorcycle control, which could result in serious injury or death.

Loading

⚠ WARNING

Never attempt to store any items between the frame and the fuel tank. This may restrict the steering aspect of the motorcycle.

Weight attached to the handlebar or front fork will increase the mass of the steering assembly. This may affect the handling, stability or other aspects of the motorcycle operation.

Failure to follow the advice above may lead to loss of motorcycle control, which could result in serious injury or death.

⚠ WARNING

The maximum safe load for each pannier is stated on a label inside the pannier and must not be exceeded.

Exceeding this loading limit may affect the handling, stability or other aspects of the motorcycle operation.

Failure to follow the advice above may lead to loss of motorcycle control, which could result in serious injury or death.

⚠ WARNING

Do not use the passenger seat to carry any objects.

Carrying objects on the passenger seat may adversely affect the motorcycle stability.

Failure to follow the advice above may lead to loss of motorcycle control, which could result in serious injury or death.

⚠ WARNING

Do not carry liquids in containers on your motorcycle.

Liquids are not stable and will adversely affect the motorcycle stability.

Failure to follow the advice above may lead to loss of motorcycle control, which could result in serious injury or death.

⚠ WARNING

Always make sure that any loads carried are evenly distributed on both sides of the motorcycle. Make sure that the load is correctly secured so that it will not move around while the motorcycle is in motion.

Where two panniers are fitted, evenly distribute the load within each pannier.

Pack heavy items at the bottom and on the inboard side of the pannier.

Always check the load security regularly (though not while the motorcycle is in motion) and make sure that the load does not extend beyond the rear of the motorcycle.

Never exceed the maximum vehicle loading weight as specified in the Specifications section.

This maximum loading weight is made up from the combined weight of the rider, passenger, any accessories fitted and any load carried.

For models that have adjustable suspension settings, make sure that front and rear spring preload and damping settings are suitable for the loading condition of the motorcycle. Note the maximum permissible payload for the panniers is stated on a label inside the pannier.

Failure to follow the advice above may lead to loss of motorcycle control, which could result in serious injury or death.

Passengers

⚠ WARNING

This motorcycle is designed for use as a two-wheeled vehicle capable of carrying a rider and up to one passenger (subject to a passenger seat and footrests being fitted).

The total weight of the rider, and any passenger, accessories and luggage must not exceed the maximum load limit as specified in the Specifications section.

Failure to follow the advice above may lead to loss of motorcycle control, which could result in serious injury or death.

⚠ WARNING

When carrying a passenger, the rider must make allowances for the handling and braking characteristics of the motorcycle.

The rider should not attempt to carry a passenger unless familiar and comfortable with the changes in these characteristics.

Failure to follow the advice above may lead to loss of motorcycle control, which could result in serious injury or death.

⚠ WARNING

Do not carry a passenger unless they are tall enough to reach the footrests provided.

A passenger who is not tall enough to reach the footrests, will be unable to sit securely on the motorcycle and may cause instability.

Failure to follow the advice above may lead to loss of motorcycle control, which could result in serious injury or death.

⚠ WARNING

Your passenger should be instructed that they can cause loss of motorcycle control by making sudden movements or by adopting an incorrect seated position.

The rider should instruct the passenger as follows:

- It is important that the passenger sits still while the motorcycle is in motion and does not interfere with the operation of the motorcycle.

⚠ WARNING Continued

- To keep their feet on the passenger footrests and to firmly hold onto either the seat strap or grab rails (if fitted) or the rider's waist or hips.

- Advise the passenger to lean with the rider when travelling around corners and not to lean unless the rider does so.

Failure to follow the advice above may lead to loss of motorcycle control, which could result in serious injury or death.

⚠ WARNING

Do not carry animals on your motorcycle.

An animal could make sudden and unpredictable movements, which may affect the handling, stability or other aspects of the motorcycle operation.

Failure to follow the advice above may lead to loss of motorcycle control, which could result in serious injury or death.

This page intentionally left blank

Table of Contents

Scheduled Maintenance 113
Disposal of Used Fluids 115
Scheduled Maintenance Table 116
Engine Oil 120
Engine Oil Level Inspection 120
Engine Oil and Oil Filter Change 122
Engine Oil Specification and Grade (10W/50) 126
Cooling System 126
Coolant Level Inspection 128
Coolant Level Adjustment 128
Coolant Change 129
Radiator and Hoses 129
Throttle Control 130
Throttle Inspection 130
Clutch 131
Clutch Inspection 131
Clutch Cable Adjustment 131
Drive Chain 132
Drive Chain Lubrication 133
Drive Chain Free Movement Inspection 133
Drive Chain Free Movement Adjustment 134
Drive Chain and Sprocket Wear Inspection 136
Brakes 139
Breaking-in New Brake Discs and Pads 139
Brake Pad Wear Compensation 139
Front Brake Wear Inspection 140
Rear Brake Wear Inspection 141
Disc Brake Fluid 142
Front Brake Fluid Level Inspection and Adjustment 143
Rear Brake Fluid Level Inspection and Adjustment 146
Brake Light Switches 147

Mirrors 147
Mirror Adjustment 149
Steering/Wheel Bearings 150
Steering Bearings Inspection 151
Wheel Bearings Inspection 152
Front Suspension 153
Front Fork Inspection 153
Rear Suspension 155
Rear Suspension Settings 155
Rear Suspension Spring Preload Adjustment 155
Bank Angle Indicators 156
Tyres 157
Tyre Inflation Pressures 158
Tyre Wear 158
Minimum Recommended Tread Depth 158
Tyre Replacement 159
Battery 162
Battery - Removal 162
Battery Disposal 164
Battery Maintenance 164
Battery Discharge 164
Battery Discharge During Storage and Infrequent Use of the Motorcycle 165
Battery Charging 165
Battery - Installation 166
Fuses 168
Fuse Identification 169
Lights 172
Headlight(s) 172
Rear Light 177
Direction Indicator Lights 177
Licence Plate Light 177

Scheduled Maintenance

⚠ WARNING

Triumph Motorcycles cannot accept any responsibility for damage or injury resulting from incorrect maintenance or improper adjustment.

Scheduled maintenance must be carried out by a competent person with the specialist knowledge and technical understanding of motorcycles, such as an authorised Triumph dealer.

Incorrect or neglected maintenance may lead to a dangerous riding condition, leading to loss of motorcycle control, which could result in serious injury or death.

⚠ WARNING

All maintenance is vitally important and must not be neglected. Incorrect maintenance or adjustment may cause one or more parts of the motorcycle to malfunction.

Weather, terrain and geographical location affect maintenance. The maintenance schedule should be adjusted to match the particular environment in which the motorcycle is used and the demands of the individual owner.

Special tools, knowledge and training are required in order to correctly carry out the maintenance items listed in the scheduled maintenance chart. An authorised Triumph dealer will have the necessary knowledge, equipment, and skills to maintain your Triumph motorcycle correctly.

Scheduled maintenance must be carried out by a competent person with the specialist knowledge and technical understanding of motorcycles, such as an authorised Triumph dealer.

Incorrect or neglected maintenance may lead to a dangerous riding condition, leading to loss of motorcycle control, which could result in serious injury or death.

MAINTENANCE AND ADJUSTMENT

To maintain the motorcycle in a safe and reliable condition, the maintenance and adjustments outlined in this section must be carried out as specified in the schedule of daily checks, and also in line with the scheduled maintenance chart. The information that follows describes the procedures to follow when carrying out the daily checks and some simple maintenance and adjustment items.

Scheduled maintenance may be carried out in three ways; annual maintenance, mileage based maintenance or a combination of both, depending on the mileage the motorcycle travels each year.

- Motorcycles travelling less than 10,000 miles (16,000 km) per year must be maintained annually. In addition to this, mileage based items require maintenance at their specified intervals, as the motorcycle reaches this mileage.
- Motorcycles travelling approximately 10,000 miles (16,000 km) per year must have the annual maintenance and the specified mileage based items carried out together.
- Motorcycles travelling more than 10,000 miles (16,000 km) per year must have the mileage based items maintained as the motorcycle reaches the specified mileage. In addition to this, annual based items will require maintenance at their specified annual intervals.

In all cases, maintenance must be carried out at or before the specified maintenance intervals shown. For advice on which maintenance schedule is most suitable for your motorcycle, contact a competent person with the specialist knowledge and technical understanding of motorcycles, such as an authorised Triumph dealer.

Triumph Motorcycles cannot accept any responsibility for damage or injury resulting from incorrect maintenance or improper adjustment.

Service Symbol/General Warning Symbol



The service symbol will illuminate for five seconds after the motorcycle start up sequence as a reminder that a service is due in approximately 62 miles (100 km). The service symbol will illuminate permanently when the mileage is reached, it will remain permanently illuminated until the service interval is reset. We recommend the service interval is reset by a competent person with the specialist knowledge and technical understanding of motorcycles, such as an authorised Triumph dealer.



The general warning symbol will flash if an ABS or engine management fault has occurred and the ABS and/or MIL warning lights are illuminated. The fault must be checked and rectified by a competent person with the specialist knowledge and technical understanding of motorcycles, such as an authorised Triumph dealer.

NOTICE

Items marked ***** in the Scheduled Maintenance Table are subject to additional labour charge, above the cost and time allowance for the basic service, which includes time to check only.

Disposal of Used Fluids

To protect the environment, do not pour the following on the ground, down sewers, drains or into watercourses:

- Engine oil
- Coolant
- Fuel
- Clutch and brake fluid
- Front fork oil.

Do not place used oil filters in with the general waste.

If in doubt for the disposal of the above, contact your local authority.

Scheduled Maintenance Table

Operation description	Odometer Reading in Miles (km) or Time Period, whichever comes first						
		First Service	Annual Service	Mileage Based Service			
	Daily	600 Mile (1,000 Km) or 6 Month Service	Year	10,000 Mile (16,000 Km) Service	20,000 Mile (32,000 Km) Service	30,000 Mile (48,000 Km) Service	40,000 Mile (64,000 Km) Service
Lubrication							
Engine - check for leaks	•	•	•	•	•	•	•
Engine oil level - check and adjust	•	•	•	•	•	•	•
Engine oil - renew		•	•	•	•	•	•
Engine oil filter - renew		•	•	•	•	•	•
Engine oil strainers (x 2) - clean		•	•	•	•	•	•
Fuel System and Engine Management							
Fuel system - check for leaks	•	•	•	•	•	•	•
Exhaust silencer drain holes - clean		•	•	•	•	•	•
Fuel and evaporative system - check hoses for chafing, cracks or damage. Replace if necessary*			•	•	•	•	•
Airbox drain tube (x 2) - drain/clean			•	•	•	•	•
Fuel filter - renew				•	•	•	•
Air filter - renew (replace more often if consistently riding in wet or dusty conditions)				•	•	•	•
Spark plugs - check				•		•	
Exhaust to crankcase mounting - check grommets for cracks and damage				•	•	•	•
Throttle body plate (butterfly) - check/ clean					•		•
Spark plugs - renew					•		•

Operation description	Odometer Reading in Miles (km) or Time Period, whichever comes first						
		First Service	Annual Service	Mileage Based Service			
	Daily	600 Mile (1,000 Km) or 6 Month Service	Year	10,000 Mile (16,000 Km) Service	20,000 Mile (32,000 Km) Service	30,000 Mile (48,000 Km) Service	40,000 Mile (64,000 Km) Service
Cooling System							
Cooling system - check for leaks	•	•	•	•	•	•	•
Coolant level - check/adjust	•	•	•	•	•	•	•
Radiator cooling fan - check for correct operation		•	•	•	•	•	•
Airbox - check hoses for chafing, cracks, pinching or damage. Replace if necessary*			•	•	•	•	•
Cooling system - check coolant hoses for chafing, cracks, pinching or damage. Replace if necessary*			•	•	•	•	•
HT Ignition lead connections - check			•	•	•	•	•
Starter motor and starter relay connections - check			•	•	•	•	•
Coolant hoses and lower radiator grommets - renew - every 4 years, regardless of mileage*	Every four years, regardless of mileage						
Coolant - renew - every 4 years, regardless of mileage*	Every four years, regardless of mileage						
Coolant pump seals - renew (30,000 miles (48,000 km) only)						•	
Engine							
Clutch - check operation	•	•	•	•	•	•	•
Clutch cable - check function and adjust/renew as necessary (models fitted with a cable clutch only)*		•	•	•	•	•	•
Clutch lever pivot - clean/grease			•	•	•	•	•
Valve clearances - check/adjust*					•		•

MAINTENANCE AND ADJUSTMENT

Operation description	Odometer Reading in Miles (km) or Time Period, whichever comes first						
		First Service	Annual Service	Mileage Based Service			
	Daily	600 Mile (1,000 Km) or 6 Month Service	Year	10,000 Mile (16,000 Km) Service	20,000 Mile (32,000 Km) Service	30,000 Mile (48,000 Km) Service	40,000 Mile (64,000 Km) Service
Wheels and Tyres							
Wheels - inspect for damage	•	•	•	•	•	•	•
Wheels - check for broken or damaged spokes and check spoke tightness (not alloy wheels)	•	•	•	•	•	•	•
Tyre wear/tyre damage - check	•	•	•	•	•	•	•
Tyre pressures - check/adjust	•	•	•	•	•	•	•
Wheel bearings - check for wear/ smooth operation					•		•
Steering and Suspension							
Steering - check for free operation	•	•	•	•	•	•	•
Front and rear suspension - check for damage/leaks/smooth operation	•	•	•	•	•	•	•
Headstock bearings - check/adjust					•		•
Swinging arm spindle - lubricate					•		•
Fork oil - renew							•
Brakes							
Brake system - check operation	•	•	•	•	•	•	•
Brake pads - check wear levels*	•	•	•	•	•	•	•
Brake fluid levels - check	•	•	•	•	•	•	•
Brake fluid - renew - every 2 years, regardless of mileage*	Every two years, regardless of mileage						

Operation description	Odometer Reading in Miles (km) or Time Period, whichever comes first						
		First Service	Annual Service	Mileage Based Service			
	Daily	600 Mile (1,000 Km) or 6 Month Service	Year	10,000 Mile (16,000 Km) Service	20,000 Mile (32,000 Km) Service	30,000 Mile (48,000 Km) Service	40,000 Mile (64,000 Km) Service
Final Drive							
Drive chain slack - check/adjust	•	•	•	•	•	•	•
Drive chain - wear check*		•	•	•	•	•	•
Drive chain - lubricate	Every 200 miles (300 km)						
Drive chain rubbing strip - check for wear, cracks or damage*		•	•	•	•	•	•
Electrical							
Lights, instruments and electrical systems - check/adjust	•	•	•	•	•	•	•
General							
Bank angle indicators - check for wear*	•	•	•	•	•	•	•
Centre and/or side stand - check for wear/smooth operation	•	•	•	•	•	•	•
Instruments and engine ECM - check for latest calibration download using the Triumph diagnostic tool		•	•	•	•	•	•
Autoscan - carry out a full Autoscan using the Triumph diagnostic tool (print a customer copy)		•	•	•	•	•	•
Fasteners - inspect visually for security		•			•		•
Carry out all outstanding Service Bulletin and warranty work		•	•	•	•	•	•
Carry out road test		•	•	•	•	•	•
Complete the service record book and reset the service indicator (if fitted)		•	•	•	•	•	•
Seat latch cable - check for smooth operation, lubricate as necessary			•	•	•	•	•

Engine Oil

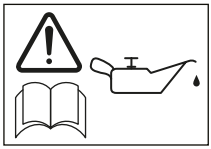

In order for the engine, transmission, and clutch to function correctly, maintain the engine oil at the correct level, and change the engine oil and oil filter in accordance with scheduled maintenance requirements.

Engine Oil Level Inspection

⚠ DANGER

Never start the engine or run the engine in a confined area.

Always operate the motorcycle in the open air or in an area with adequate ventilation.

Exhaust fumes are poisonous and will cause loss of consciousness and death within a short period of time.

⚠ WARNING

Make sure that the motorcycle is stabilised and adequately supported.

Do not support the motorcycle on any ancillary component, the exhaust system or any other non-structural parts of the motorcycle frame.

A correctly supported motorcycle will help prevent it from falling.

Failure to follow the advice above could result in serious injury or death.

⚠ WARNING

Make sure that the engine oil level is correct and the oil is changed in accordance with the scheduled maintenance requirements.

Motorcycle operation with insufficient, deteriorated, or contaminated engine oil will cause accelerated engine wear and may result in engine or transmission seizure.

Seizure of the engine or transmission may lead to sudden loss of motorcycle control, which could result in serious injury or death.

⚠ CAUTION

If the engine has recently been running, the exhaust components may be hot to the touch.

To avoid skin damage, always allow the hot parts to cool before touching the exhaust system.

Contact with the hot components may cause minor to moderate injury to exposed skin.

NOTICE

If the engine oil pressure is too low, the low oil pressure warning light will illuminate.

If the low oil pressure indicator remains on, stop the engine immediately and investigate the situation.

Running the engine with low oil pressure will cause severe engine damage.

- Position the motorcycle on level ground and in an upright position. The sight glass can be viewed from the right hand side of the motorcycle, towards the rear of the engine.
- Start the engine and run at idle for approximately five minutes.
- Stop the engine, then wait for at least five minutes to allow the engine oil to settle.
- Note the engine oil level visible in the sight glass.
- When correct, engine oil should be visible in the sight glass at a point between the upper (maximum) and lower (minimum) markings on the sight glass.

NOTICE

An accurate indication of the level of engine oil in the engine is only shown when the engine is at normal operating temperature and the motorcycle is upright (not on the side stand).

- If it is necessary to top up the oil level, remove the engine oil filler plug and using a suitable funnel, add oil, a little at a time, until the level registered in the sight glass is correct.

⚠ CAUTION

Make sure no contamination enters the engine during an engine oil change or top up.

Contamination entering the engine may lead to engine damage.

- When the correct level is reached, fit and tighten the engine oil filler plug.

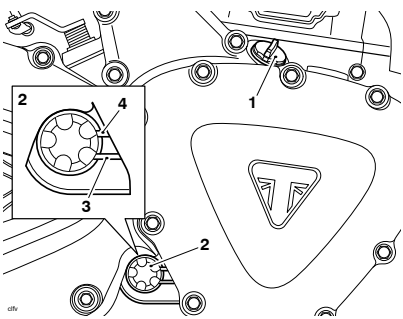

1. **Engine oil filler plug**
2. **Sight glass**
3. **Lower marking (minimum)**
4. **Upper marking (maximum)**

Engine Oil and Oil Filter Change

⚠ WARNING

Always wear suitable protective clothing and avoid skin contact with used engine oil.

Prolonged or repeated contact with engine oil can lead to skin dryness, irritation and dermatitis.

Used engine oil contains harmful contamination that can lead to skin cancer.

Failure to follow the advice above could result in serious injury or death.

⚠ CAUTION

The engine oil may be hot.

Avoid contact with the hot engine oil by wearing suitable protective clothing, gloves and eye protection.

Contact with the hot engine oil may cause minor to moderate injury to exposed skin.

⚠ CAUTION

If the engine has recently been running, the exhaust components may be hot to the touch.

To avoid skin damage, always allow the hot parts to cool before touching the exhaust system.

Contact with the hot components may cause minor to moderate injury to exposed skin.

The engine oil and engine oil filter must be replaced in accordance with scheduled maintenance requirements.

- Remove the two fixings that attach the front left cover finisher and remove the finisher.

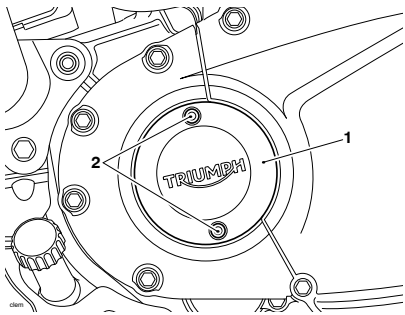

1. **Front left cover finisher**
2. **Fixings**

- Remove the fixings that attach the front left engine cover and remove the cover.

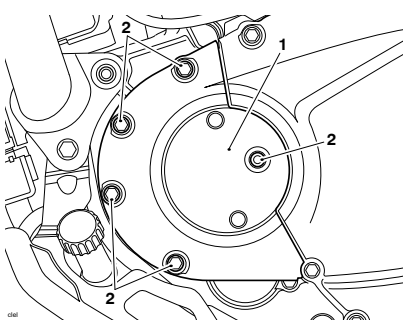

1. **Front left engine cover**
2. **Fixings**

Engine Oil Strainer

- Warm up the engine thoroughly and stop the engine.
- Position the motorcycle on level ground and in an upright position.
- Place an oil drain pan beneath the engine.
- Remove the engine oil drain plug and discard the O-ring.
- Drain the engine oil.
- Remove the engine oil strainer.
- Clean the engine oil drain plug and fit a new O-ring.
- Clean the engine oil strainer.

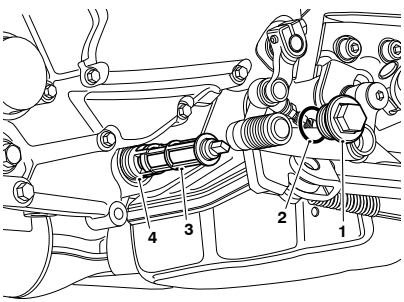

cldp

1. **Engine oil drain plug**
2. **Engine oil drain plug O-ring**
3. **Engine oil strainer**
4. **Engine oil strainer O-ring**

Evacuation Strainer

- Remove the evacuation strainer plug with the evacuation strainer.
- Allow the engine oil to drain.
- Pull the plug from the evacuation strainer and discard the O-ring.
- Clean the evacuation strainer and evacuation strainer plug. Fit a new O-ring to the plug.
- Fit the evacuation strainer
- Fit and tighten the evacuation strainer plug to 10 Nm.

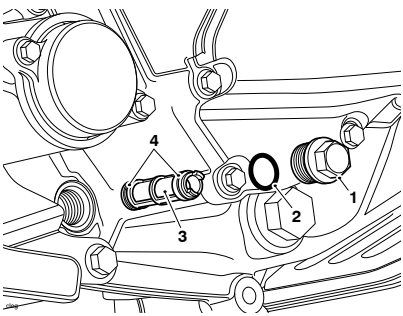

1. **Evacuation strainer plug**
2. **Evacuation strainer plug O-ring**
3. **Evacuation strainer**
4. **Evacuation strainer O-rings**

Engine Oil Filter

- Remove the fixings from the engine oil filter cover.
- Remove the cover and discard the O-ring.
- Using a suitable tool, remove the engine oil filter. Dispose of the old oil and oil filter in an environmentally friendly way.
- Dip the engine oil filter in clean engine oil before fitment.
- Fit a new O-ring to the cover.
- Fit the engine oil filter and cover, and tighten the fixings to 11 Nm.

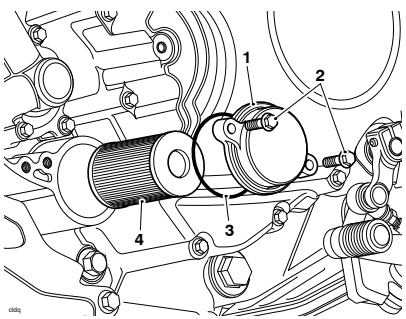

1. **Engine oil filter cover**
2. **Engine oil filter cover fixings**
3. **Engine oil filter cover O-ring**
4. **Engine oil filter**

- Fit the engine oil strainer.
- Fit and tighten the engine oil drain plug to 13 Nm.

Engine Oil Filling

- Remove the engine oil filler plug.
- Using a suitable funnel, fill the engine with a fully synthetic 10W/50 motorcycle engine oil that meets specification API SN (or higher) and JASO MA2. Semi-synthetic engine oil must not be used. Triumph Performance fully synthetic engine oil is recommended.

NOTICE

The engine oil grade specified must be used.

Using the incorrect engine oil grade may result in engine damage.

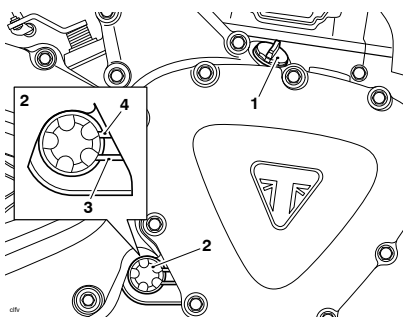

1. **Engine oil filler plug**
2. **Sight glass**
3. **Lower marking (minimum)**
4. **Upper marking (maximum)**

- Start the engine and allow it to idle for a minimum of 30 seconds.

NOTICE

Raising the engine speed above idle before the oil reaches all parts of the engine can cause engine damage or seizure.

Only raise engine speed after running the engine for 30 seconds to allow the oil to circulate fully.

- Make sure that the low oil pressure warning light remains off.

NOTICE

If the engine oil pressure is too low, the low oil pressure warning light will illuminate.

If the low oil pressure indicator remains on, stop the engine immediately and investigate the situation.

Running the engine with low oil pressure will cause severe engine damage.

- Stop the engine, then wait for at least five minutes to allow the engine oil to settle.
- Recheck the engine oil level. Adjust if necessary, see page 120.
- Position the front left engine cover and install the fixings. Tighten to 11 Nm.

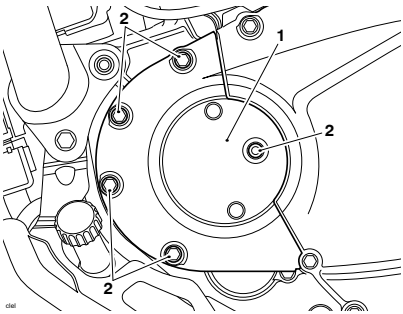

1. **Front left engine cover**
2. **Fixings**

- Position the front left cover finisher and install the two fixings. Tighten to 7 Nm.

Engine Oil Specification and Grade (10W/50)

This Triumph high-performance fuel injected engine is designed to use fully synthetic 10W/50 motorcycle engine oil that meets specification API SN (or higher) and JASO MA2. Semi-synthetic engine oil must not be used. Triumph Performance fully synthetic engine oil is recommended.

NOTICE

The engine oil grade specified must be used.

Using the incorrect engine oil grade may result in engine damage.

Do not add any chemical additives to the engine oil. The engine oil also lubricates the clutch and any additives could cause the clutch to slip.

Do not use mineral, vegetable, non-detergent oil, castor based oils or any oil not conforming to the required specification. The use of these oils may cause instant, severe engine damage.

Make sure that no foreign matter enters the crankcase during an engine oil change or top up.

Cooling System





To ensure efficient engine cooling, check the coolant level each day before riding the motorcycle, and top up the coolant if the level is low.

NOTICE

The motorcycle is filled with a year round, Organic Additive Technology (known as OAT) coolant when it leaves the factory. It is coloured orange or green, and contains a 50% solution of monoethylene glycol based antifreeze.

Triumph D2053 OAT coolant (premixed) is coloured orange.

HP THANDA RAJA B OAT coolant is coloured green.

These premixed coolants provide freeze protection to at least -34°C (-29°F).

Do not mix coolants of different types and colours. Mixing coolants of different types will reduce the performance of the coolant and reduce its life. When replacing coolant, it is recommended to thoroughly flush the cooling system with clean water.

Corrosion Inhibitors

⚠ WARNING

Coolant contains corrosion inhibitors and antifreeze suitable for aluminium engines and radiators. Always use the coolant in accordance with the instructions of the manufacturer.

Coolant contains toxic chemicals that are harmful to the human body.

Contact with skin or eyes may cause severe irritation. Wear protective gloves, clothing and eye protection when handling coolant.

If coolant is inhaled, remove the person to fresh air and keep comfortable for breathing. In case of doubt or persistent symptoms, seek medical attention.

If coolant gets on your skin, flush with water immediately. Remove contaminated clothing.

If coolant gets in your eyes, flush with water for at least 15 minutes and SEEK MEDICAL ATTENTION IMMEDIATELY.

If coolant is swallowed, rinse the mouth with water and SEEK MEDICAL ATTENTION IMMEDIATELY.

KEEP COOLANT OUT OF THE REACH OF CHILDREN.

NOTICE

Coolant, as supplied by Triumph, is premixed and does not need to be diluted prior to filling or topping up the cooling system.

To protect the cooling system from corrosion, the use of corrosion inhibiting chemicals in the coolant is essential.

If coolant containing a corrosion inhibitor is not used, the cooling system will accumulate rust and scale in the water jacket and radiator. This will block the coolant passages, and considerably reduce the efficiency of the cooling system.

Do not mix coolants of different types and colours. Mixing coolants of different types will reduce the performance of the coolant and reduce its life. When replacing coolant, it is recommended to thoroughly flush the cooling system with clean water.

Coolant Level Inspection

NOTICE

The coolant level should be checked when the engine is cold (at room or ambient temperature).

- Position the motorcycle on level ground and in an upright position. The expansion tank can be viewed from the left hand side of the motorcycle, towards the front and below the engine.
- Check the coolant level in the expansion tank. The coolant level must be between the MAX and MIN marks.

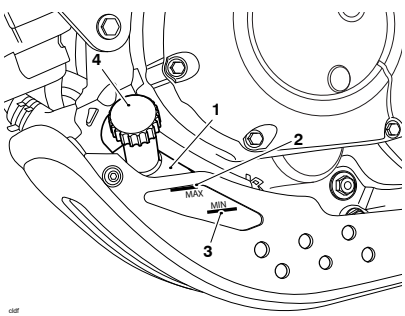

cldf

1. **Expansion tank (Scrambler 400 X shown)**
2. **MAX mark**
3. **MIN mark**
4. **Expansion tank cap**

- If the coolant is below the minimum level, the coolant level must be adjusted, see page 128.

Coolant Level Adjustment

⚠ CAUTION

Do not remove the radiator pressure cap when the engine is hot.

When the engine is hot, the coolant inside the radiator will be hot and also under pressure.

Contact with this hot, pressurised coolant may cause minor to moderate injury to exposed skin.

NOTICE

If hard water is used in the cooling system, it will cause scale accumulation in the engine and radiator and considerably reduce the efficiency of the cooling system.

Reduced cooling system efficiency may cause the engine to overheat and suffer severe damage.

- Allow the engine to cool.
- The expansion tank can be viewed from the left hand side of the motorcycle, towards the front and below the engine.
- Remove the cap from the expansion tank and add coolant mixture through the filler opening until the level reaches the MAX mark.

▼ Refit the cap.

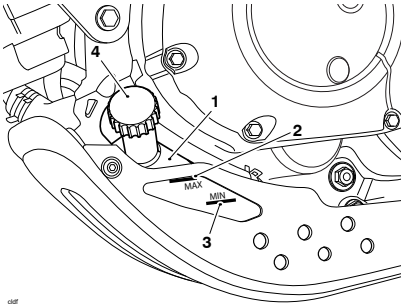

cldf

1. **Expansion tank (Scrambler 400 X shown)**
2. **MAX mark**
3. **MIN mark**
4. **Expansion tank cap**

NOTICE

If the coolant level is being checked because the coolant has overheated, also check the level in the radiator and top up if necessary.

In an emergency, distilled water can be added to the cooling system. However, the coolant must then be drained and replenished with the correct OAT coolant as soon as possible.

Coolant Change

We recommend that the coolant is changed in accordance with scheduled maintenance requirements.

Radiator and Hoses

⚠ CAUTION

The fan operates automatically when the engine is running.

Always keep hands and clothing away from the fan.

Contact with the rotating fan could result in minor to moderate injury.

NOTICE

Using high pressure water sprays, such as from a car wash facility or household pressure washer, can damage the radiator fins, cause leaks and impair the radiator's efficiency.

Do not obstruct or deflect airflow through the radiator by installing unauthorised accessories, either in front of the radiator or behind the cooling fan.

Interference with the radiator airflow can cause overheating, potentially resulting in engine damage.

Check the radiator hoses for cracks or deterioration, and tension clips for tightness in accordance with scheduled maintenance requirements. Any defective items must be replaced by a competent person with the specialist knowledge and technical understanding of motorcycles, such as an authorised Triumph dealer.

Check the radiator grille and fins for obstructions by insects, leaves or mud. Clean off any obstructions with a stream of low pressure water.

Throttle Control

⚠ WARNING

Always be alert for changes in the 'feel' of the throttle control. Changes can be due to wear in the mechanism, which could lead to a sticking or stuck throttle control.

If any changes are detected, the throttle system must be inspected by a competent person with the specialist knowledge and technical understanding of motorcycles, such as an authorised Triumph dealer.

A sticking or stuck throttle control may lead to loss of motorcycle control, which could result in serious injury or death.

Throttle Inspection

⚠ WARNING

Use of the motorcycle with a sticking or damaged throttle control will interfere with the throttle function. The throttle may be difficult to control and performance will be affected.

To avoid continued use of a sticking or damaged throttle control, the throttle system must be inspected by a competent person with the specialist knowledge and technical understanding of motorcycles, such as an authorised Triumph dealer.

Failure to follow the advice above may lead to loss of motorcycle control, which could result in serious injury or death.

- Check that the throttle opens smoothly, without undue force and that it closes quickly under its own return spring force without sticking and without manual intervention.
- Check that there is 1 - 2 mm of throttle grip free play when lightly turning the throttle grip back and forth.
- If a problem is detected or any doubt exists, or if there is an incorrect amount of free play, the throttle system must be inspected by a competent person with the specialist knowledge and technical understanding of motorcycles, such as an authorised Triumph dealer.

Clutch

The motorcycle is equipped with a cable-operated clutch.

If the clutch lever has excessive free play, the clutch may not disengage fully. This will cause difficulty in changing gear and selecting neutral. This may cause the engine to stall and make the motorcycle difficult to control.

Conversely, if the clutch lever has insufficient free play the clutch may not engage fully, causing the clutch to slip, which will reduce performance and cause premature clutch wear.

Clutch lever free play must be checked in accordance with scheduled maintenance requirements.

Clutch Inspection

- Check that there is a 3.0 - 5.0 mm of free play at the clutch lever with steering in the straight ahead position.
- If there is an incorrect amount of free play, adjustments must be made, see page 131.

Clutch Cable Adjustment

- Loosen the lock nut at the clutch lever.
- Turn the adjuster sleeve to give 3.0 - 5.0 mm of free play with steering in the straight ahead position.
- Tighten the lock nut.

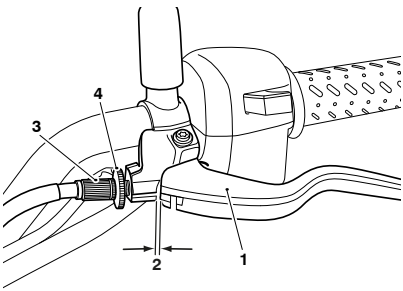

cldc

1. **Clutch lever**
2. **Clearance**
3. **Adjuster sleeve**
4. **Adjuster lock nut**

NOTICE

If correct adjustment cannot be made using the lever adjuster, use the cable adjuster at the lower end of the cable.

- If the clutch cable is loose, loosen the lock nut and turn the clutch cable adjuster clockwise to give 3.0 - 5.0 mm of free play at the clutch lever with steering in the straight ahead position.
- If the clutch cable is tight, loosen the lock nut and turn the clutch cable adjuster anticlockwise to give 3.0 - 5.0 mm of free play at the clutch lever with steering in the straight ahead position.
- Tighten the lock nut to 15 Nm.

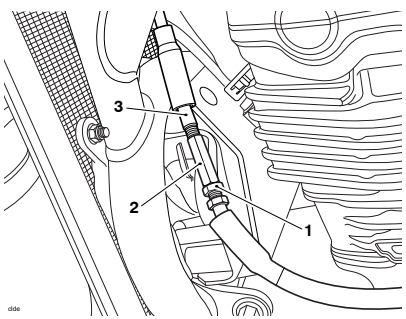

1. **Adjuster lock nut**
2. **Clutch cable adjuster**
3. **Clutch outer cable**

Drive Chain

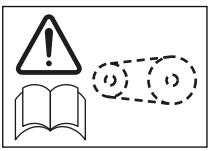

DANGER

A loose or worn chain, or a chain that breaks or jumps off the sprockets could catch on the engine sprocket or lock the rear wheel.

A chain that snags on the engine sprocket or locks the rear wheel will injure the rider.

Failure to follow the advice above will lead to loss of motorcycle control, which will result in serious injury or death.

For safety and to prevent excessive wear the drive chain must be checked, adjusted and lubricated in accordance with scheduled maintenance requirements. Checking, adjustment and lubrication must be carried out more frequently for extreme conditions such as high speed riding, salty or heavily gritted roads.

If the chain is badly worn or incorrectly adjusted (either too loose or too tight) the chain could jump off the sprockets or break. Therefore, we recommend to always replace worn or damaged chains using genuine Triumph parts.

Drive Chain Lubrication

Lubrication is necessary every 200 miles (300 km) and also after riding in wet weather, on wet roads, or any time that the chain appears dry.

- Use the special drive chain lubricant as recommended in the Specifications section.
- Apply lubricant to the sides of the rollers then allow the motorcycle to stand unused for at least eight hours (overnight is ideal). This will allow the lubricant to penetrate to the drive chain O-rings etc.
- Before riding, wipe off any excess lubricant.

NOTICE

Do not use a pressure washer to clean the drive chain as this may cause damage to the drive chain components.

- If the drive chain is especially dirty, clean first and then apply lubricant as mentioned above.

Drive Chain Free Movement Inspection

⚠ WARNING

Make sure that the motorcycle is stabilised and adequately supported.

Do not support the motorcycle on any ancillary component, the exhaust system or any other non-structural parts of the motorcycle frame.

A correctly supported motorcycle will help prevent it from falling.

Failure to follow the advice above could result in serious injury or death.

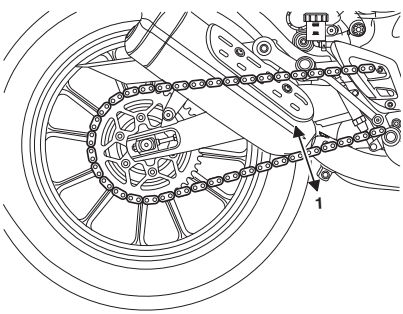

1. **Maximum movement position (Scrambler 400 X shown)**

- Position the motorcycle on level ground and in an upright position with no weight on it.
- Rotate the rear wheel by pushing the motorcycle to find the position where the drive chain is tightest, and measure the vertical movement of the chain midway between the sprockets.
- The vertical movement of the drive chain must be in the range of 20-25 mm for the Speed 400, the Thruxton 400 and the Tracker 400. The vertical movement of the drive chain must be in the range of 40-45 mm for the Scrambler 400 X and the Scrambler 400 XC.
- If the measurement exceeds the range, then the drive chain needs to be adjusted, see page 134.

Drive Chain Free Movement Adjustment

If the drive chain free movement is incorrect, adjustments must be made as follows:

- Loosen the rear wheel spindle nut.
- Loosen the lock nuts on both the left hand and right hand chain adjuster bolts.
- Moving both adjusters by an equal amount, using the adjuster markings as a guideline, turn the adjuster bolts clockwise to increase drive chain free movement and anticlockwise to reduce drive chain free movement.
- When the drive chain free movement has been set to 20-25 mm for the Speed 400, the Thruxton 400 and the Tracker 400 push the wheel into firm contact with the adjusters. When the drive chain free movement has been set to 40-45 mm for Scrambler 400 X and Scrambler 400 XC, push the wheel into firm contact with the adjusters. See page 133.

- Make sure the same adjuster marking is aligned with the spindle adjuster on both sides of the swinging arm.
- Tighten both adjuster lock nuts to 11 Nm and the rear wheel spindle nut to 98 Nm.

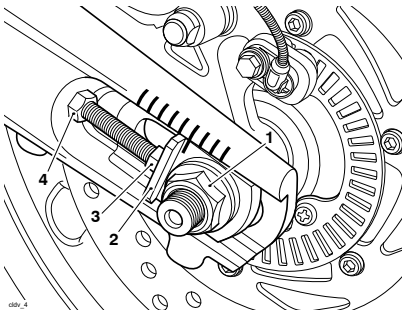

1. **Rear wheel spindle nut (Scrambler 400 X shown)**
2. **Spindle adjuster**
3. **Adjuster bolt**
4. **Adjuster bolt lock nut**

- Repeat the drive chain inspection. Readjust if necessary.

⚠ WARNING

When the drive chain adjustment is complete, make sure the wheel spindle and the adjuster lock nuts are tightened to the correct torque.

Operation of the motorcycle with a loose wheel spindle and/or loose adjuster lock nuts may affect the handling and stability.

Failure to follow the advice above may lead to loss of motorcycle control, which could result in serious injury or death.

- Check the rear brake effectiveness. Rectify if necessary.

⚠ WARNING

It is dangerous to operate the motorcycle with defective brakes.

If a problem is detected or any doubt exists, the brakes must be inspected by a competent person with the specialist knowledge and technical understanding of motorcycles, such as an authorised Triumph dealer.

Operation of the motorcycle with defective brakes may lead to loss of motorcycle control which could result in serious injury or death.

Drive Chain and Sprocket Wear Inspection

⚠ WARNING

Make sure that the motorcycle is stabilised and adequately supported.

Do not support the motorcycle on any ancillary component, the exhaust system or any other non-structural parts of the motorcycle frame.

A correctly supported motorcycle will help prevent it from falling.

Failure to follow the advice above could result in serious injury or death.

⚠ WARNING

Replacement drive chains must be installed by a competent person with the specialist knowledge and technical understanding of motorcycles, such as an authorised Triumph dealer.

We recommend to always replace worn or damaged chains using genuine Triumph parts.

Incorrectly installed drive chains may result in a broken drive chain or may cause the drive chain to jump off the sprockets, leading to loss of motorcycle control which could result in serious injury or death.

NOTICE

If the sprockets are found to be worn, always replace the sprockets and drive chain together.

Replacing worn sprockets without also replacing the drive chain will lead to premature wear of the new sprockets.

- Remove the exhaust silencer, see Exhaust Secondary Silencer - Removal in the Service Manual.
- Release the two fixings and remove the final drive chain guard.

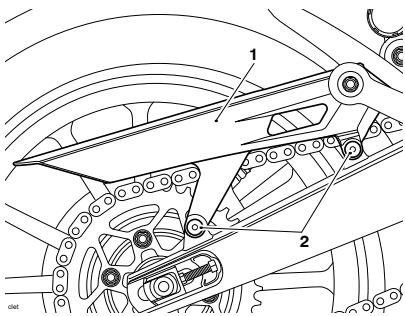

1. **Final drive chain guard**
2. **Fixings**

Drive Chain Damage Inspection

⚠ WARNING

If the drive chain is found to have damaged rollers, loose pins or stiff links, the drive chain must be replaced.

Do not attempt to loosen any stiff links. The stiff link may have damaged or worn components.

Riding with drive chain stiff links, or loosened stiff links, may result in a broken drive chain or may cause the drive chain to jump off the sprockets, leading to loss of motorcycle control which could result in serious injury or death.

- Rotate the rear wheel and inspect the drive chain for damaged rollers, loose pins and stiff links.

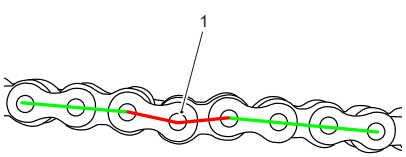

1. Stiff link

- If the drive chain has any damaged rollers, loose pins or stiff links, the drive chain must be replaced by a competent person with the specialist knowledge and technical understanding of motorcycles, such as an authorised Triumph dealer.

Drive Chain Wear Inspection

- Stretch the drive chain taut by hanging a 10 - 20 kg (20 - 40 lb) weight on the drive chain.
- Measure the length of 20 links on the straight part of the drive chain from pin centre of the 1st pin to the pin centre of the 21st pin. Since the drive chain may wear unevenly, take measurements in several places.

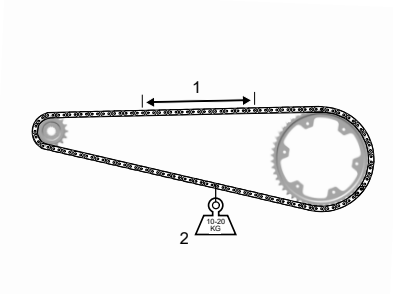

1. Measure across 20 links
2. Weight

- If the length exceeds the maximum service limit, the drive chain must be replaced. Refer to the Specifications section for the maximum service limit.

Sprockets Wear Inspection

NOTICE

The illustration shows wear on sprockets mounted on the left hand side of the motorcycle.

For sprockets mounted on the right hand side of the motorcycle, the wear is on the opposite side of the tooth.

- Rotate the rear wheel and inspect the sprockets for unevenly or excessively worn or damaged teeth.

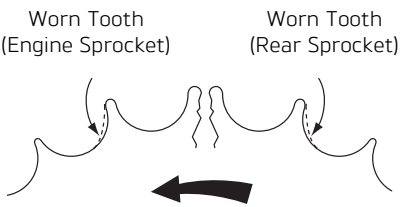

(Sprocket wear exaggerated for illustrative purposes)

ccol

- If there is any wear or damage, the drive chain and the sprockets must be replaced by a competent person with the specialist knowledge and technical understanding of motorcycles, such as an authorised Triumph dealer.
- Fit the final drive chain guard and tighten the fixings to 9 Nm.

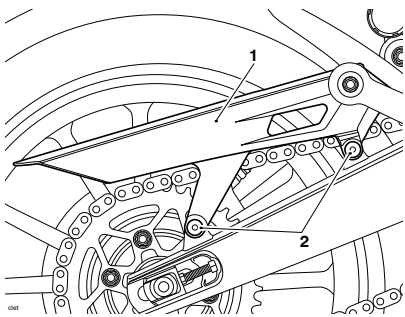

clet

1. **Final drive chain guard**
2. **Fixings**

- Install the exhaust silencer, see Exhaust Secondary Silencer - Installation in the Service Manual.

Brakes

Breaking-in New Brake Discs and Pads

⚠ WARNING

Brake pads must always be replaced as a wheel set. At the front, replace all the brake pads in the caliper.

After replacement brake pads have been fitted, ride with extreme caution until the new pads have 'broken in'.

Replacing individual pads will reduce braking efficiency and may lead to loss of motorcycle control which could result in serious injury or death.

New brake discs and pads require a period of careful breaking-in that will optimise the performance and longevity of the discs and pads.

The recommended distance for breaking-in new pads and discs is 200 miles (300 km).

During the breaking-in period, avoid extreme braking, ride with caution and allow for greater braking distances.

Brake Pad Wear Compensation

⚠ WARNING

If the brake lever or pedal feels soft when it is applied, or if the lever/pedal travel becomes excessive, there may be air in the brake pipes and hoses or the brakes may be defective.

The fault must be checked and rectified by a competent person with the specialist knowledge and technical understanding of motorcycles, such as an authorised Triumph dealer.

Riding with defective brakes may lead to a dangerous riding condition, leading to loss of motorcycle control, which could result in serious injury or death.

Disc and brake pad wear is automatically compensated for and has no effect on the brake lever or pedal action. There are no parts that require adjustment on the front and rear brakes.

Front Brake Wear Inspection

⚠ WARNING

The use of proprietary brands of brake pads is not recommended as these may have a reduced carrier plate thickness when compared with the Triumph genuine parts.

Brake pads with an incorrect carrier plate thickness can potentially become dislodged from the caliper body as they wear, leading to brake failure, loss of motorcycle control and an accident.

Failure to follow the advice above could result in serious injury or death.

Brake pads must be inspected in accordance with scheduled requirements and replaced if worn to, or beyond the minimum service thickness.

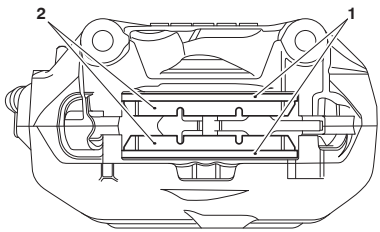

1. **Carrier plates (Speed 400 shown)**
2. **Brake pads**

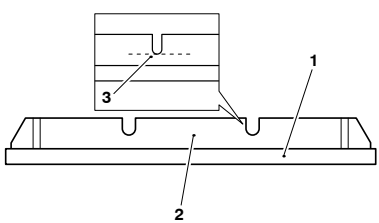

1. **Carrier plate (Speed 400 shown)**
2. **Brake pad lining**
3. **Minimum thickness line**

Brake pads for this model supplied by Triumph will have the carrier plate at the recommended thickness. We recommend that the brake pads are changed by a competent person with the specialist knowledge and technical understanding of motorcycles, such as an authorised Triumph dealer.

If the lining thickness of any brake pad is less than that specified in the table, replace all the brake pads on the wheel.

	Speed 400, Thruxton 400 and Tracker 400	Scrambler 400 X and Scrambler 400 XC
Carrier plate thickness	3.5 mm	3.74 mm
Front brake pad lining minimum thickness	0.5mm	0.5 mm
Minimum service thickness (Brake pad lining and carrier plate)	4 mm	-
Minimum service thickness (Brake pad lining, carrier plate and shim)	-	4.24 mm

Rear Brake Wear Inspection

⚠ WARNING

The use of proprietary brands of brake pads is not recommended as these may have a reduced carrier plate thickness when compared with the Triumph genuine parts.

Brake pads with an incorrect carrier plate thickness can potentially become dislodged from the caliper body as they wear, leading to brake failure, loss of motorcycle control and an accident.

Failure to follow the advice above could result in serious injury or death.

Brake pads must be inspected in accordance with scheduled requirements and replaced if worn to, or beyond the minimum service thickness.

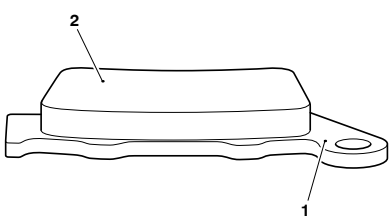

clev

1. **Carrier plate**
2. **Brake pad**

Brake pads for this model supplied by Triumph will have the carrier plate at the recommended thickness. We recommend that the brake pads are changed by a competent person with the specialist knowledge and technical understanding of motorcycles, such as an authorised Triumph dealer.

If the lining thickness of any brake pad is less than that specified in the table, replace all the brake pads on the wheel.

	All Models
Carrier plate thickness	3.0 mm
Rear brake pad lining minimum thickness	0.8 mm
Minimum service thickness (Brake pad lining and carrier plate)	3.8 mm

Disc Brake Fluid

⚠ WARNING

Brake fluid is hygroscopic, which means it will absorb moisture from the air.

Any absorbed moisture will greatly reduce the boiling point of the brake fluid, causing a reduction in braking efficiency.

Because of this, always replace brake fluid in accordance with scheduled maintenance requirements.

Always use new brake fluid from a sealed container, and never use fluid from an unsealed container or from one that has been previously opened.

Do not mix different brands or grades of brake fluid.

Check for fluid leakage around brake fittings, seals and joints and also check the brake hoses for splits, deterioration and damage.

Always rectify any faults before riding.

Failure to follow the advice above may lead to loss of motorcycle control, which could result in serious injury or death.

⚠ WARNING

If the ABS is not functioning, the brake system will continue to function as a non-ABS equipped brake system. Reduce speed and do not continue to ride for longer than is necessary with the ABS warning light illuminated.

The fault must be checked and rectified by a competent person with the specialist knowledge and technical understanding of motorcycles, such as an authorised Triumph dealer.

Braking too hard will cause the wheels to lock, leading to loss of motorcycle control, which could result in serious injury or death.

Inspect the level of brake fluid in both reservoirs and change the brake fluid in accordance with scheduled maintenance requirements. Use Triumph Performance DOT 4 brake fluid as recommended in the Specification section. The brake fluid must also be changed if it becomes, or is suspected of having become contaminated with moisture or any other contaminants.

Front Brake Fluid Level Inspection and Adjustment

⚠ WARNING

Make sure that the motorcycle is stabilised and adequately supported.

Do not support the motorcycle on any ancillary component, the exhaust system or any other non-structural parts of the motorcycle frame.

A correctly supported motorcycle will help prevent it from falling.

Failure to follow the advice above could result in serious injury or death.

⚠ WARNING

If there has been an appreciable drop in the level of the fluid in either fluid reservoir, the brake system must be inspected.

If the brake lever or pedal feels soft when it is applied, or if the lever/pedal travel becomes excessive, there may be air in the brake lines or the brake may be defective.

Riding with depleted brake fluid levels, or with a brake fluid leak is dangerous and will cause reduced brake performance.

Contact a competent person with the specialist knowledge and technical understanding of motorcycles, such as an authorised Triumph dealer to inspect and, if necessary, repair the brake system.

Failure to follow the advice above may lead to loss of motorcycle control, which could result in serious injury or death.

NOTICE

To prevent paint damage, do not spill brake fluid onto any area of the bodywork.

Spilled brake fluid will damage paintwork.

To inspect the front brake fluid level:

- Check the level of brake fluid visible in the window at the front of the reservoir.
- The brake fluid level must be kept between the MAX and MIN marks (reservoir held horizontal).

Speed 400, Scrambler 400 X, Scrambler 400 XC and Tracker 400

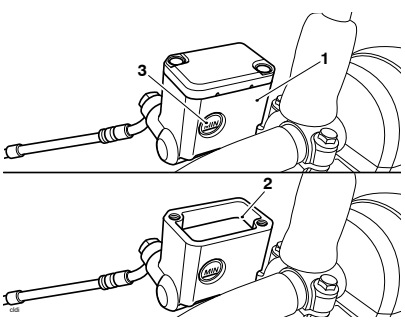

1. **Reservoir (Scrambler 400 X shown)**
2. **MAX mark**
3. **MIN mark**

Thruxton 400

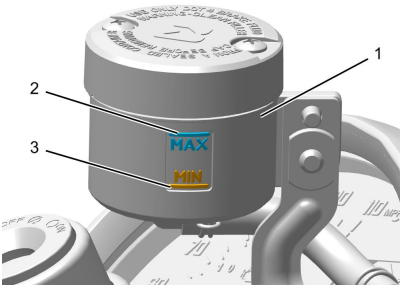

1. **Front brake fluid reservoir**
2. **MAX level line**
3. **MIN level line**

To adjust the front brake fluid level:

- Release the reservoir cap retaining screws and remove the reservoir cap, and the plastic spacer and diaphragm seal.
- Fill the reservoir to the MAX mark using new DOT 4 brake fluid from a sealed container. Triumph Performance DOT 4 brake fluid is recommended.
- Refit the reservoir cap making sure that the plastic spacer and diaphragm seal is correctly positioned between the reservoir cap and the reservoir.

⚠ WARNING

Do not over tighten reservoir cap fixings.

Over tightened reservoir cap fixings may damage the brake fluid reservoir causing a brake fluid leak leading to reduced braking efficiency.

Failure to follow the advice above may lead to loss of motorcycle control, which could result in serious injury or death.

- Tighten the reservoir cap retaining screws to 1 Nm.

Speed 400, Scrambler 400 X, Scrambler 400 XC and Tracker 400

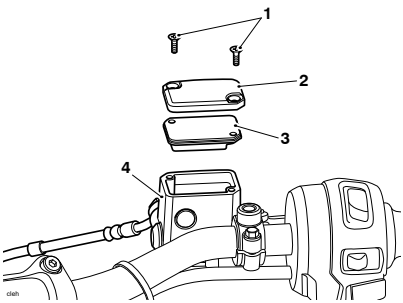

1. **Reservoir cap retaining screws (Speed 400 shown)**
2. **Reservoir cap**
3. **Plastic spacer and diaphragm seal**
4. **Reservoir**

Thruxton 400

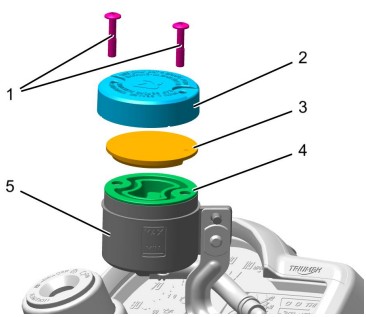

1. **Reservoir cap retaining screws**
2. **Reservoir cap**
3. **Plastic spacer**
4. **Diaphragm**
5. **Reservior**

Rear Brake Fluid Level Inspection and Adjustment

⚠ WARNING

Make sure that the motorcycle is stabilised and adequately supported.

Do not support the motorcycle on any ancillary component, the exhaust system or any other non-structural parts of the motorcycle frame.

A correctly supported motorcycle will help prevent it from falling.

Failure to follow the advice above could result in serious injury or death.

⚠ WARNING

If there has been an appreciable drop in the level of the fluid in either fluid reservoir, the brake system must be inspected.

If the brake lever or pedal feels soft when it is applied, or if the lever/pedal travel becomes excessive, there may be air in the brake lines or the brake may be defective.

Riding with depleted brake fluid levels, or with a brake fluid leak is dangerous and will cause reduced brake performance.

Contact a competent person with the specialist knowledge and technical understanding of motorcycles, such as an authorised Triumph dealer to inspect and, if necessary, repair the brake system.

Failure to follow the advice above may lead to loss of motorcycle control, which could result in serious injury or death.

NOTICE

To prevent paint damage, do not spill brake fluid onto any area of the bodywork.

Spilled brake fluid will damage paintwork.

The reservoir is visible from the right hand side of the motorcycle, forward of the silencer and below the seat.

To inspect the rear brake fluid level:

- Check the level of brake fluid visible in the reservoir.
- The brake fluid level must be kept between the MAX and MIN marks (reservoir held horizontal).

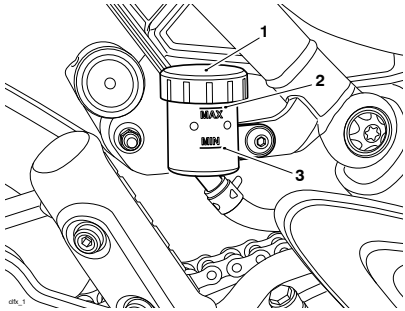

1. **Reservoir**
2. **MAX mark**
3. **MIN mark**

To adjust the rear brake fluid level:

- Remove the reservoir cap, and the plastic spacer and diaphragm seal.
- Fill the reservoir to the MAX mark using new DOT 4 brake fluid from a sealed container. Triumph Performance DOT 4 brake fluid is recommended.
- Refit the reservoir cap making sure that the plastic spacer and diaphragm seal is correctly positioned between the reservoir cap and the reservoir.

Brake Light Switches

⚠ WARNING

Riding the motorcycle with defective brake lights is illegal and dangerous.

Before riding the motorcycle, make sure all lights are working.

Failure to follow the advice above could result in serious injury or death.

The brake light is activated independently by either the front or rear brake. If, with the ignition in the ON position, the brake light does not work when the front brake lever is pulled or the rear brake pedal is pressed, the fault must be checked and rectified by a competent person with the specialist knowledge and technical understanding of motorcycles, such as an authorised Triumph dealer.

Mirrors

⚠ WARNING

Always adjust the mirrors to provide sufficient rearward vision before riding the motorcycle.

Operation of the motorcycle with incorrectly adjusted mirrors is dangerous.

Operation of the motorcycle with incorrectly adjusted mirrors will result in loss of vision to the rear of the motorcycle. It is dangerous to ride a motorcycle without sufficient rearward vision.

Failure to follow the advice above could result in serious injury or death.

⚠ WARNING

Never attempt to clean or adjust mirrors while riding the motorcycle. Removal of the rider's hands from the handlebars while riding the motorcycle will diminish the ability of the rider to maintain control of the motorcycle.

Only attempt to clean or adjust the mirrors while stationary.

Attempting to clean or adjust mirrors while riding the motorcycle may lead to loss of motorcycle control, which could result in serious injury or death.

Models with Bar End Mirrors

⚠ WARNING

Incorrect adjustment of the bar end mirrors may cause the mirror arm to come into contact with the fuel tank, brake or clutch levers, or other parts of the motorcycle.

This will restrict brake or clutch lever operation or restrict steering movement which may affect the handling, stability or other aspects of the motorcycle operation.

Adjust the mirrors as required to make sure they do not come into contact with any part of the motorcycle. After adjustment, move the handlebar to the left and right full lock, while checking that the mirrors do not contact the fuel tank, brake or clutch levers, or other parts of the motorcycle.

Failure to follow the advice above may lead to loss of motorcycle control, which could result in serious injury or death.

NOTICE

Incorrect adjustment of the bar end mirrors may cause the mirror arm to come into contact with the fuel tank, brake or clutch levers, or other parts of the motorcycle.

This will result in damage to the fuel tank, brake or clutch levers, or other parts of the motorcycle.

Adjust the mirrors as required to make sure they do not come into contact with any part of the motorcycle. After adjustment, move the handlebar to the left and right full lock, while checking that the mirrors do not contact the fuel tank, brake or clutch levers, or other parts of the motorcycle.

The bar end mirrors will be set by your authorised Triumph dealer and will not normally require any adjustment. Should adjustment be necessary, do not rotate the mirror beyond 75°, measured from the vertical section of the mirror arm.

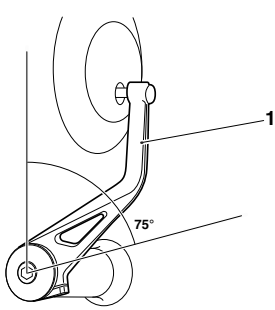

1. **Mirror arm vertical section**

Mirror Adjustment

⚠ WARNING

Make sure that the motorcycle is stabilised and adequately supported.

Do not support the motorcycle on any ancillary component, the exhaust system or any other non-structural parts of the motorcycle frame.

A correctly supported motorcycle will help prevent it from falling.

Failure to follow the advice above could result in serious injury or death.

⚠ WARNING

If the mirror fixing is too loose, the mirror may blow back at speed.

Operation of the motorcycle with incorrectly adjusted mirrors will result in loss of vision to the rear of the motorcycle. It is dangerous to ride a motorcycle without sufficient rearward vision.

Failure to follow the advice above may lead to loss of motorcycle control, which could result in serious injury or death.

Speed 400, Scrambler 400 X, Scrambler 400 XC and Tracker 400

NOTICE

The right mirror arm and lock nut has a left hand thread.

The left mirror arm and lock nut has a right hand thread.

- Lift the rubber cover to access the lock nut and mirror boss.

NOTICE

Use an open ended spanner to counter-hold the mirror boss as the mirror lock nut is loosened/tightened. Failure to counter-hold the boss will cause damage to the thread and the mirror to become loose.

- Counter-hold the mirror boss and loosen the mirror lock nut.

- Position the mirror arm to give rear visibility in the riding position and tighten the lock nut by hand.
- Counter-hold the mirror boss and tighten the mirror lock nut to 22.5 Nm.
- Slide the rubber cover over the lock nut.

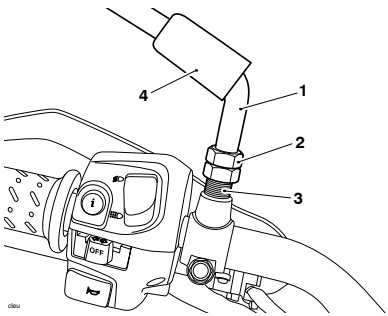

1. **Mirror arm (Scrambler 400 X shown)**
2. **Lock nut**
3. **Mirror boss**
4. **Rubber cover**

Steering/Wheel Bearings

⚠ WARNING

To prevent risk of injury from the motorcycle falling during the inspection, make sure that the motorcycle is stabilised and secured on a suitable support.

When inspecting steering and wheel bearings, do not exert extreme force against each wheel or rock each wheel vigorously, as this may cause the motorcycle to become unstable and fall from its support.

Failure to follow the advice above could result in motorcycle damage, serious injury or death.

Steering Bearings Inspection

⚠ WARNING

Make sure that the motorcycle is stabilised and adequately supported.

Do not support the motorcycle on any ancillary component, the exhaust system or any other non-structural parts of the motorcycle frame.

A correctly supported motorcycle will help prevent it from falling.

Failure to follow the advice above could result in serious injury or death.

⚠ WARNING

Never neglect steering (headstock) bearings maintenance. Check the steering bearings in accordance with scheduled maintenance requirements and make adjustments or replace as necessary.

Scheduled maintenance must be carried out by a competent person with the specialist knowledge and technical understanding of motorcycles, such as an authorised Triumph dealer.

Riding the motorcycle with incorrectly adjusted or defective steering bearings is dangerous and may lead to loss of motorcycle control, which could result in serious injury or death.

The steering (headstock) bearings must be lubricated and inspected in accordance with scheduled maintenance requirements.

NOTICE

Always inspect the wheel bearings at the same time as the steering bearings.

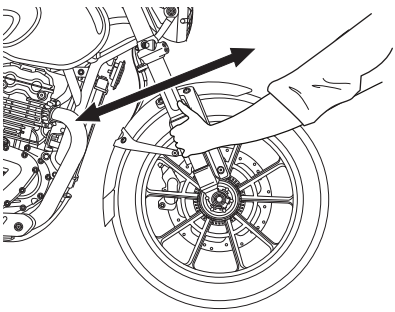

Inspecting the Steering for Free Play

- Position the motorcycle on level ground, in an upright position.
- Place the motorcycle on a suitable stand with the front wheel off the ground and secure the motorcycle.
- Standing at the front of the motorcycle, hold the lower end of the front forks and try to move them forward and backward.
- If any free play can be detected in the steering (headstock) bearings, the steering bearings must be inspected and adjusted by a competent person with the specialist knowledge and technical understanding of motorcycles, such as an authorised Triumph dealer.
- Remove the support and place the motorcycle on the side stand.

Wheel Bearings Inspection

⚠ WARNING

Make sure that the motorcycle is stabilised and adequately supported.

Do not support the motorcycle on any ancillary component, the exhaust system or any other non-structural parts of the motorcycle frame.

A correctly supported motorcycle will help prevent it from falling.

Failure to follow the advice above could result in serious injury or death.

⚠ WARNING

Never neglect wheel bearings maintenance. Check the wheel bearings in accordance with scheduled maintenance requirements and make adjustments or replace as necessary.

Scheduled maintenance must be carried out by a competent person with the specialist knowledge and technical understanding of motorcycles, such as an authorised Triumph dealer.

Riding the motorcycle with worn or damaged wheel bearings is dangerous and may lead to loss of motorcycle control, which could result in serious injury or death.

The wheel bearings must be inspected at the intervals specified in the scheduled maintenance chart.

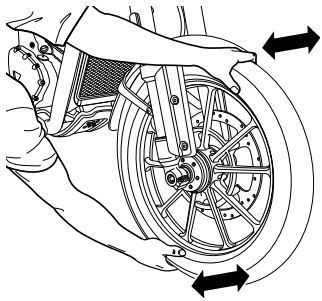

Inspecting the Wheel Bearings

NOTICE

If the wheel bearings in the front or rear wheel allow play in the wheel hub, are noisy, or if the wheel does not turn smoothly, the wheel bearings must be inspected by a competent person with the specialist knowledge and technical understanding of motorcycles, such as an authorised Triumph dealer.

- Position the motorcycle on level ground, in an upright position.
- Place the motorcycle on a suitable stand with the front wheel off the ground and secure the motorcycle.
- Standing at the side of the motorcycle, gently rock the top of the front wheel from side to side.
- If any free play can be detected in the wheel bearings, the wheel bearings must be inspected and replaced by a competent person with the specialist knowledge and technical understanding of motorcycles, such as an authorised Triumph dealer.
- Reposition the suitable stand and repeat the procedure for the rear wheel.
- Remove the support and place the motorcycle on the side stand.

Front Suspension

This motorcycle has no front suspension adjustment.

Front Fork Inspection

⚠ WARNING

Make sure that the motorcycle is stabilised and adequately supported.

Do not support the motorcycle on any ancillary component, the exhaust system or any other non-structural parts of the motorcycle frame.

A correctly supported motorcycle will help prevent it from falling.

Failure to follow the advice above could result in serious injury or death.

⚠ WARNING

Never neglect front fork maintenance. Check the front forks in accordance with scheduled maintenance requirements and make adjustments or replace as necessary.

Scheduled maintenance must be carried out by a competent person with the specialist knowledge and technical understanding of motorcycles, such as an authorised Triumph dealer.

Riding with defective or damaged suspension components is dangerous and may lead to loss of motorcycle control, which could result in serious injury or death.

⚠ CAUTION

All suspension units contain pressurised oil.

Do not attempt to dismantle any part of the suspension units. Inspections and repairs must be completed by a competent person with the specialist knowledge and technical understanding of motorcycles, such as an authorised Triumph dealer.

Accidental release of pressurised oil or springs could result in minor to moderate injury.

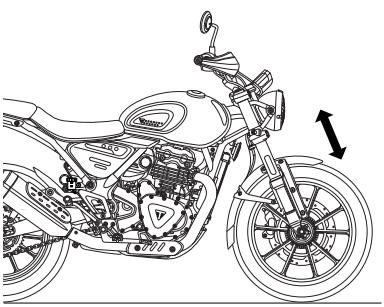

Scrambler 400 X Shown

- Position the motorcycle on level ground.
- While holding the handlebars and applying the front brake, pump the forks up and down several times.
- Check for roughness or excessive stiffness.
- Examine each fork for any sign of damage, scratching of the slider surface, or for oil leaks.

If a problem is detected or any doubt exists, the forks must be inspected by a competent person with the specialist knowledge and technical understanding of motorcycles, such as an authorised Triumph dealer.

Rear Suspension

Rear Suspension Settings

The motorcycle is delivered from the factory with all the suspension settings set at the Standard setting.

Refer to the following table or for further information contact a competent person with the specialist knowledge and technical understanding of motorcycles, such as an authorised Triumph dealer.

Rear Suspension Settings	
Loading Condition	**Spring Preload[1]**
Solo Riding	1
Solo Riding and Luggage	5
Rider and Passenger	10
Rider, Passenger and luggage	10

[1] Position 1 is minimum (fully clockwise) and position 10 is maximum (fully anticlockwise).

The details shown in the table are only a guide. Setting requirements may vary for rider and passenger weight and personal preferences.

Rear Suspension Spring Preload Adjustment

The spring preload adjuster is located at the bottom of the rear suspension unit.

Rear adjuster settings are counted from one, with position one being with the adjuster turned fully clockwise. Position one gives the minimum amount of spring preload. There are ten adjuster positions in total. Position ten gives the maximum amount of spring preload.

- Insert the adjustment tool (supplied with the motorcycle) into the slots of the spring preload adjuster ring.
- Turn the spring preload adjuster ring anticlockwise to increase spring preload, and clockwise to decrease spring preload. When delivered from the factory, the preload adjuster will be set at position one.

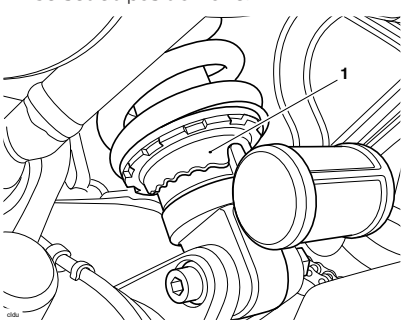

1. Spring preload adjuster ring

- Always count the number of anticlockwise turns from the fully clockwise position.

Bank Angle Indicators

⚠ WARNING

The bank angle indicators must not be used as a guide to how far the motorcycle may be safely banked.

This depends on many various conditions including, but not limited to:

- Road surface
- Tyre condition
- Weather.

Banking to an unsafe angle may lead to loss of motorcycle control, which could result in serious injury or death.

⚠ WARNING

Always replace the bank angle indicators before they are worn to their maximum limit.

Use of a motorcycle with bank angle indicators worn beyond the maximum limit will allow the motorcycle to be banked to an unsafe angle.

Banking to an unsafe angle may lead to loss of motorcycle control which could result in serious injury or death.

⚠ WARNING

When banking and the bank angle indicator, attached to the rider's footrest, makes contact with the ground, the motorcycle is nearing its bank angle limit.

A further increase of the banking angle is unsafe.

Banking to an unsafe angle may lead to loss of motorcycle control which could result in serious injury or death.

Bank angle indicators are located on the rider's footrests.

Regularly check the bank angle indicators for wear.

The bank angle indicators must be replaced when they have reached the minimum length remaining as specified in the table.

The minimum length is measured from rider's footrest to the end of the bank angle indicator.

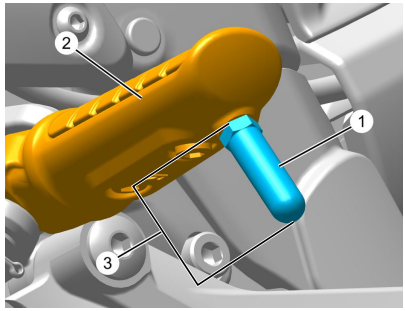

1. **Bank angle indicator (Thruxton 400 shown)**
2. **Footrest**
3. **Bank angle indicator length**

Model	Minimum Bank Angle Indicator Length
Speed 400	10 mm
Scrambler 400 X	10 mm
Scrambler 400 XC	10 mm
Thruxton 400	25 mm
Tracker 400	25 mm

Tyres

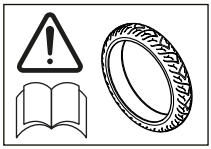

The motorcycle is fitted with either cast or spoked wheels, tubeless tyres, valves and wheel rims. Use only tyres marked 'TUBELESS' and tubeless valves on wheel rims marked 'SUITABLE FOR TUBELESS TYRES'.

⚠ WARNING

Do not install tube type tyres on tubeless rims. The bead will not seat and the tyres could slip on the rims, causing rapid tyre deflation.

Never install an inner tube inside a tubeless tyre without the appropriate marking. This will cause friction inside the tyre and the resulting heat build-up may cause the tube to burst resulting in rapid tyre deflation.

Failure to follow the advice above may lead to loss of motorcycle control, which could result in serious injury or death.



Typical Tyre Marking - Tubeless Tyre

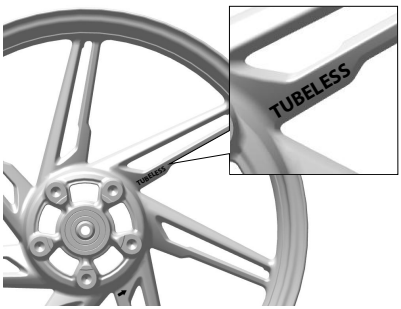

Typical Cast Wheel Marking - Tubeless Tyre

Tyre Inflation Pressures

⚠ WARNING

Incorrect tyre inflation will cause abnormal tread wear and instability.

Underinflation may result in the tyre slipping on, or coming off the rim. Overinflation will cause accelerated tread wear and instability.

Both conditions are dangerous as they may lead to loss of motorcycle control, which could result in serious injury or death.

⚠ WARNING

Tyre pressures that have been reduced for off-road riding will impair on-road stability.

Always make sure that the tyre pressures are set as described in the Specification section for on-road use.

Operation of the motorcycle with incorrect tyre pressures may lead to loss of motorcycle control, which could result in serious injury or death.

Correct inflation pressure will provide maximum stability, rider comfort and tyre life. Always check tyre pressures before riding when the tyres are cold. Check tyre pressures daily and adjust if necessary. See the Specification section for details of the correct inflation pressures.

Tyre Wear

As the tyre tread wears down, the tyre becomes more susceptible to punctures and failure. It is estimated that 90% of all tyre problems occur during the last 10% of tread life (90% worn). It is recommended that tyres are changed before they are worn to their minimum tread depth.

Minimum Recommended Tread Depth

⚠ WARNING

Riding with damaged or defective wheels and/or excessively worn, punctured or damaged tyres will affect traction, handling and stability.

When tubeless tyres become punctured, leakage is often very slow. Always inspect tyres very closely for punctures. Check the tyres for cuts, embedded nails or other sharp objects. Check the wheel rims for dents or deformation.

For tyre replacement or for a safety inspection of the tyres, contact a competent person with the specialist knowledge and technical understanding of motorcycles, such as an authorised Triumph dealer.

Riding with damaged wheels and tyres is dangerous and may lead to loss of motorcycle control, which could result in serious injury or death.

In accordance with the periodic maintenance chart, measure the depth of the tread with a depth gauge, and replace any tyre that has worn to, or beyond, the minimum allowable tread depth specified in the table below:

Under 80 mph (130 km/h)	2 mm (0.08 in)
Over 80 mph (130 km/h)	Front 2 mm (0.08 in) Rear 3 mm (0.12 in)

Tyre Replacement

All Triumph motorcycles are carefully and extensively tested in a range of riding conditions to make sure that the most effective tyre combinations are approved for use on each model.

It is essential that approved tyres fitted in approved combinations, are used when purchasing replacement items.

The use of non-approved tyres or approved tyres in non-approved combinations, may lead to motorcycle instability, loss of control and an accident.

A list of approved tyres specific to your motorcycle are available from your authorised Triumph dealer, or on the Internet at www.triumphtechnicalinformation.com/tyres.

Or;

Scan the QR code using your smart device:

Tyres must be selected in the correct combination, from the approved Tyre Selector. Tyres must be fitted and balanced according to the tyre manufacturer's instructions.

When replacement tyres are required, contact a competent person with the specialist knowledge and technical understanding of motorcycles, such as an authorised Triumph dealer.

Initially, the new tyres will not produce the same handling characteristics as the worn tyres and the rider must allow adequate riding distance (approximately 100 miles (160 km)) to become accustomed to the new handling characteristics.

The tyre pressures must be checked and adjusted, and the tyres examined for correct seating 24 hours after fitting. Rectification must be carried out as necessary. The same checks and adjustments must also be carried out when 100 miles (160 km) have been travelled after fitting.

⚠ WARNING

Use the recommended tyres ONLY in the combinations listed in the approved Tyre Selector at www.triumphtechnicalinformation.com /tyres.

Do not mix tyres from different manufacturers or mix different specification tyres from the same manufacturers.

Using/mixing tyres may affect the handling, stability, braking and traction control (if fitted) functions of the motorcycle.

Failure to follow the advice above may lead to loss of motorcycle control, which could result in serious injury or death.

⚠ WARNING

Do not install tube type tyres on tubeless rims. The bead will not seat and the tyres could slip on the rims, causing rapid tyre deflation.

Never install an inner tube inside a tubeless tyre without the appropriate marking. This will cause friction inside the tyre and the resulting heat build-up may cause the tube to burst resulting in rapid tyre deflation.

Failure to follow the advice above may lead to loss of motorcycle control, which could result in serious injury or death.

⚠ WARNING

If a tyre sustains a puncture, the tyre must be replaced.

Operation of the motorcycle with a punctured or repaired tyre may adversely affect the motorcycle stability.

Failure to follow the advice above may lead to loss of motorcycle control, which could result in serious injury or death.

⚠ WARNING

If tyre damage is suspected, such as after striking an object, the tyre must be inspected both internally and externally by a competent person with the specialist knowledge and technical understanding of motorcycles, such as an authorised Triumph dealer.

Tyre damage may not always be visible from the outside.

Operation of the motorcycle with damaged tyres may lead to loss of motorcycle control, which could result in serious injury or death.

⚠ WARNING

Do not use the motorcycle with incorrectly seated tyres or incorrectly adjusted tyre pressures.

Incorrectly seated tyres or incorrectly adjusted tyre pressures may affect the handling, stability or other aspects of the motorcycle operation.

Failure to follow the advice above may lead to loss of motorcycle control, which could result in serious injury or death.

⚠ WARNING

ABS operates by comparing the relative speed of the front and rear wheels.

Use of non-recommended tyres can affect wheel speed and cause the ABS function not to operate in conditions where the ABS would normally function.

A list of approved tyres specific to these models is available from your authorised Triumph dealer, or on the Internet at www.triumphtechnicalinformation.com/tyres.

Failure to follow the advice above may lead to loss of motorcycle control, which could result in serious injury or death.

⚠ WARNING

Accurate wheel balance is necessary for safe, stable handling of the motorcycle. Do not remove or change any wheel balance weights. Incorrect wheel balance may cause instability.

Only use self-adhesive weights. Clip on weights may damage the wheel or tyre resulting in tyre deflation.

When wheel balancing is required, such as after tyre replacement, contact a competent person with the specialist knowledge and technical understanding of motorcycles, such as an authorised Triumph dealer.

Failure to follow the advice above may lead to loss of motorcycle control, which could result in serious injury or death.

⚠ WARNING

Tyres that have been used on a rolling road dynamometer may become damaged. In some cases, the damage may not be visible on the external surface of the tyre.

Tyres must be replaced after such use as continued use of a damaged tyre may cause instability.

Failure to follow the advice above may lead to loss of motorcycle control, which could result in serious injury or death.

Battery

⚠ WARNING

The battery contains sulphuric acid (battery acid). Contact with skin or eyes may cause severe burns. Wear protective clothing and a face shield.

If battery acid gets on your skin, flush with water immediately.

If battery acid gets in your eyes, flush with water for at least 15 minutes and SEEK MEDICAL ATTENTION IMMEDIATELY.

If battery acid is swallowed, drink large quantities of water and SEEK MEDICAL ATTENTION IMMEDIATELY.

KEEP BATTERY ACID OUT OF THE REACH OF CHILDREN.

Failure to follow the advice above could result in serious injury or death.

⚠ WARNING

Make sure that there is adequate ventilation when charging or using the battery in an enclosed space.

Under certain circumstances, the battery may release explosive gases. Make sure to keep all sparks, flames and cigarettes away from the battery.

Do not attach jump leads to the battery, touch the battery cables together or reverse the polarity of the cables, as any of these actions may cause a spark which would ignite battery gases causing a risk of serious injury or death.

⚠ WARNING

The battery contains harmful materials.

Always keep children and pets away from the battery at all times.

Failure to follow the advice above could result in serious injury or death.

Battery - Removal

⚠ WARNING

Make sure that the motorcycle is stabilised and adequately supported.

Do not support the motorcycle on any ancillary component, the exhaust system or any other non-structural parts of the motorcycle frame.

A correctly supported motorcycle will help prevent it from falling.

Failure to follow the advice above could result in serious injury or death.

⚠ WARNING

Make sure that the battery terminals do not touch the motorcycle frame.

This may cause a short circuit or spark which would ignite battery gases.

Failure to follow the advice above could result in serious injury or death.

⚠ WARNING

Before disconnecting the battery or removing a fuse for any reason, note and record the riding modes settings.

Once the fuse has been refitted or the battery reconnected, the riding modes should be reset as noted.

Failure to reset the motorcycle riding modes settings and subsequently being ridden, may cause loss of motorcycle control, which could result in serious injury or death.

- Remove the seat for the Speed 400, Thruxton 400 and Tracker 400. Remove the rider and passenger seats for Scrambler 400 X and Scrambler 400 XC, see page 80.
- Disconnect the battery negative (black) lead.

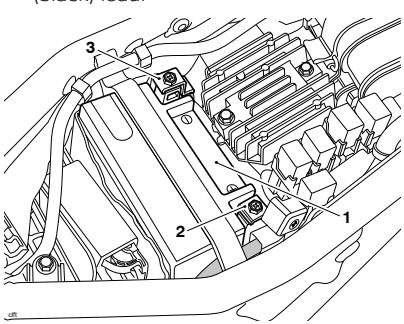

1. **Battery**
2. **Positive (+) terminal**
3. **Negative (-) terminal**

- Remove the positive (+) terminal protective cover to gain access to the fixing.

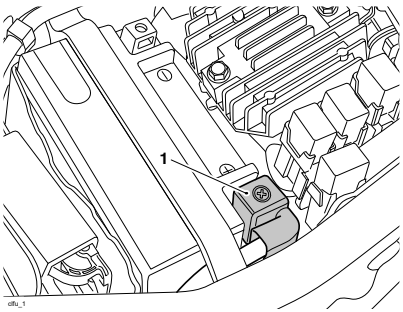

1. **Positive (+) terminal cover**

- Disconnect the battery positive (red) lead.
- Remove the battery strap.

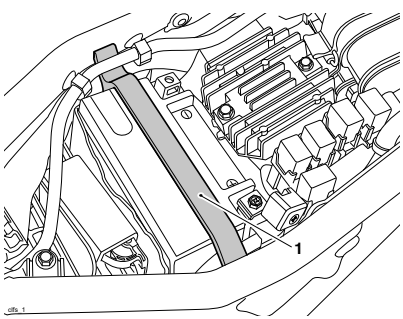

1. **Battery strap**

- Take the battery out of the case and remove from the battery sleeve.

Battery Disposal

Should the battery ever require replacement, the original battery must be handed to a recycling agent who will make sure that the dangerous substances from which the battery is manufactured do not pollute the environment.

Battery Maintenance

⚠ WARNING

Battery acid is corrosive and poisonous and will cause damage to unprotected skin.

Never swallow battery acid or allow it to come into contact with the skin.

To prevent injury, always wear eye and skin protection when handling the battery.

Failure to follow the advice above could result in serious injury or death.

The battery is a sealed type and does not require any maintenance other than checking the voltage and routine recharging when required, such as during storage.

Clean the battery using a clean, dry cloth. Make sure that the cable connections are clean.

It is not possible to adjust the battery acid level in the battery; the sealing strip must not be removed.

Battery Discharge

NOTICE

The charge level in the battery must be maintained to maximise battery life.

Failure to maintain the battery charge level could cause serious internal damage to the battery.

Under normal conditions, the motorcycle charging system will keep the battery fully charged. However, if the motorcycle is unused, the battery will gradually discharge due to a normal process called self-discharge; the clock, engine ECM memory, high ambient temperatures, or the addition of electrical security systems or other electrical accessories will all increase this rate of battery discharge. Disconnecting the battery from the motorcycle during storage will reduce the rate of discharge.

Battery Discharge During Storage and Infrequent Use of the Motorcycle

During storage or infrequent use of the motorcycle, inspect the battery voltage weekly using a multimeter. Follow the manufacturer's instructions supplied with the meter.

Should the battery voltage fall below 12.7 Volts, the battery should be charged.

Allowing a battery to discharge or leaving it discharged for even a short period of time causes sulphation of the lead plates. Sulphation is a normal part of the chemical reaction inside the battery, however over time the sulphate can crystallise on the plates making recovery difficult or impossible. This permanent damage is not covered by the motorcycle warranty, as it is not due to a manufacturing defect.

Keeping the battery fully charged reduces the likelihood of it freezing in cold conditions. Allowing a battery to freeze will cause serious internal damage to the battery.

Battery Charging

⚠ WARNING

The battery contains sulphuric acid (battery acid). Contact with skin or eyes may cause severe burns. Wear protective clothing and a face shield.

If battery acid gets on your skin, flush with water immediately.

If battery acid gets in your eyes, flush with water for at least 15 minutes and SEEK MEDICAL ATTENTION IMMEDIATELY.

If battery acid is swallowed, drink large quantities of water and SEEK MEDICAL ATTENTION IMMEDIATELY.

KEEP BATTERY ACID OUT OF THE REACH OF CHILDREN.

Failure to follow the advice above could result in serious injury or death.

NOTICE

Do not use an automotive quick charger as it may overcharge and damage the battery.

For help with selecting a battery charger, checking the battery voltage or battery charging, contact a competent person with the specialist knowledge and technical understanding of motorcycles, such as an authorised Triumph dealer.

For extended periods of storage (beyond two weeks) the battery should be removed from the motorcycle and kept charged using a Triumph approved maintenance charger.

Similarly, should the battery charge fall to a level where it will not start the motorcycle, remove the battery from the motorcycle before charging.

Should the battery voltage fall below 12.7 Volts, the battery should be charged using a Triumph approved battery charger. Always remove the battery from the motorcycle.

The Triumph recommended battery charger will come with a set of battery connector leads:

- A connector lead with ring terminals.
- A connector lead with crocodile clips.

To charge the battery, do the following:

- We recommend removing the battery from the motorcycle before charging.
  - If the battery needs to be charged when fitted to the motorcycle, use the connector lead with ring terminals (supplied with the Triumph recommended battery charger).
  - Do not use the USB socket (if fitted) to charge the motorcycle battery.
  - The connector lead with crocodile clips (supplied with the Triumph recommended battery charger) must not be used to charge the battery when it is fitted to the motorcycle.
- Follow the instructions supplied with the approved battery charger.
- Charge the battery with a lower current than the MAX Charging Current found on the charging label.
- If the battery becomes hot to the touch, stop charging and allow the battery to cool before resuming.
- After charging, leave the battery for 1 to 2 hours before checking the voltage. If the voltage is less than 12.9 Volts, additional charging is necessary.

Battery - Installation

⚠ WARNING

Make sure that the motorcycle is stabilised and adequately supported.

Do not support the motorcycle on any ancillary component, the exhaust system or any other non-structural parts of the motorcycle frame.

A correctly supported motorcycle will help prevent it from falling.

Failure to follow the advice above could result in serious injury or death.

⚠ WARNING

Make sure that the battery terminals do not touch the motorcycle frame.

This may cause a short circuit or spark which would ignite battery gases.

Failure to follow the advice above could result in serious injury or death.

⚠ WARNING

If the battery has been disconnected or the fuses removed for any reason, advise the rider to confirm the original mode settings have been correctly set.

Failure to reset the motorcycle to the rider's preferred rider mode settings and subsequently being ridden, may cause loss of motorcycle control which could result in serious injury or death.

- Place the battery in the battery sleeve and then in the battery case.

- Secure the battery into position with the battery strap.

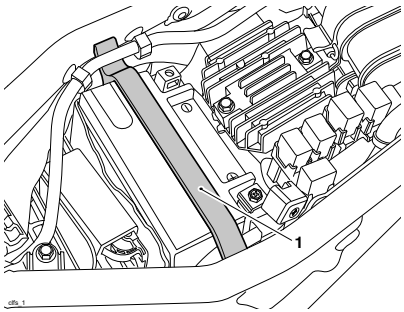

1. Battery strap

- Reconnect the battery, positive (red) lead first and then the negative (black) lead.
- Fit and tighten the positive (+) terminal fixing to 4.5 Nm.
- Fit and tighten the negative (-) terminal fixing to 4.5 Nm.
- Apply a light coat of grease to the battery terminals to prevent corrosion.
- Cover the positive (+) terminal with the protective cover.

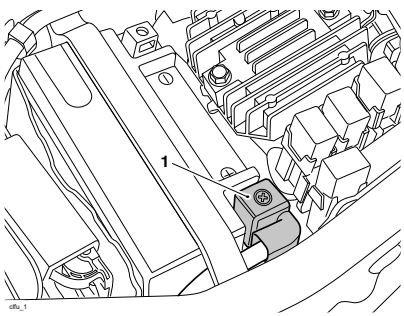

1. Positive (+) terminal cover

Engine Start Procedure After Battery Disconnection or Fuse Replacement

NOTICE

Always follow the start procedure.

Failure to follow the start procedure will cause the motorcycle to remain in a limp-home mode and the Malfunction Indicator Light (MIL) to remain on.

- If not already in the RUN position, switch the engine run/stop switch to the RUN position.
- Turn the ignition key to the ON position. The instruments will initialise after approximately 10 seconds.
- Start the engine and allow to run for a minimum of 10 seconds.
  - Switch off the ignition.
- Restart the engine and allow to run for a minimum of 10 seconds.
  - Switch off the ignition.

- Restart the engine and allow to run for a minimum of 10 seconds.
  - Switch off the ignition.
- Restart the engine. The MIL will turn off after the start-up checks have been completed.
- Check the throttle response. The engine will now respond correctly to the throttle and the MIL will go off.
  - If the engine does not respond to the throttle and/or the MIL remains illuminated repeat the procedure again.
- Refit the seat for the Speed 400, the Thruxton 400 and the Tracker 400. Refit the rider and passenger seats for Scrambler 400 X and Scrambler 400 XC, see page 82.

NOTICE

Once the fuse has been refitted or the battery reconnected the rider's settings should be reset as noted.

Fuses

⚠ WARNING

Always replace blown fuses with new ones of the correct rating (as specified on the fuse box cover).

Never replace a blown fuse with a fuse of a different rating.

Use of an incorrect fuse could lead to an electrical problem, resulting in motorcycle damage and leading to loss of motorcycle control, which could result in serious injury or death.

NOTICE

A blown fuse is indicated when all of the systems protected by that fuse become inoperative. When checking for a blown fuse, use the tables to establish which fuse has blown.

Fuse box 1 is located underneath the seat. To allow access to the fuse box, the seat for Speed 400,Thruxton 400 and Tracker 400 must be removed. The passenger seat for Scrambler 400 X and Scrambler 400 XC must be removed, see page 80.

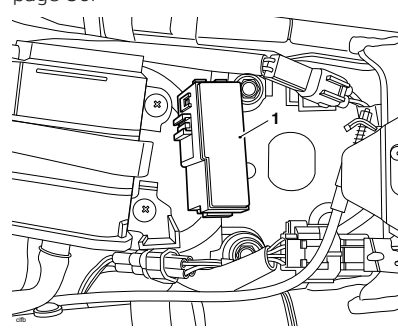

1. **Fuse box 1**

Fuse box 2 and the main fuse are located behind the left hand side panel. To allow access to the fuses, the side panel must be removed, see page 69.

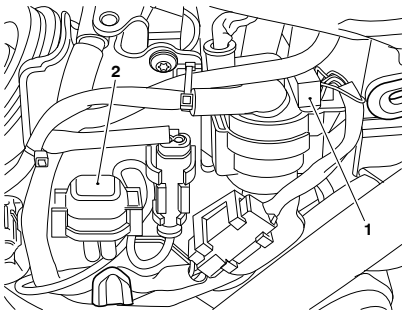

1. **Main fuse (starter solenoid)**
2. **Fuse box 2**

After replacing a fuse, refer to the engine start procedure, see page 167.

Fuse Identification

The fuse identification numbers listed in the tables correspond with those printed on the fuse box covers, as shown below.

Spare fuses for fuse box 1 are located on the inside of the fuse box and should be replaced if used.

Thruxton 400 and Tracker 400

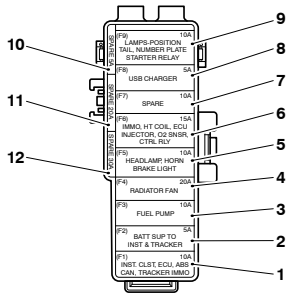

Fuse Box 1

Fuse Number and Circuit Protected	Rating (Amps)
Fuse 1 - Ignition supply to instruments, ECU, ABS CAN and tracker unit	10
Fuse 2 - Battery supply to instruments, tracker unit	5
Fuse 3 - Fuel pump	10
Fuse 4 - Cooling fan	20
Fuse 5 - Headlight (dipped beam, high beam and DRL), horn and brake/rear light	10
Fuse 6 - Immobiliser, HT coil, ECU injector, oxygen sensor and control relay	15
Fuse 7 - Spare	10
Fuse 8 - USB socket	5
Fuse 9 - Position light, licence plate light and starter relay	5
Spare Fuse - 5A	5
Spare Fuse - 20A	20
Spare Fuse - 30A	30

Speed 400 **up to VIN A25050** and Scrambler 400 X **up to VIN A19433**

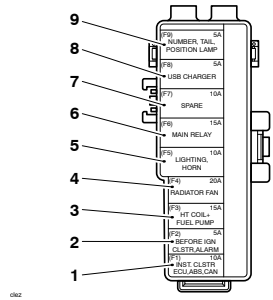

Fuse Box 1

Fuse Number and Circuit Protected	Rating (Amps)
Fuse 1 - Ignition supply to instruments, ABS, immobiliser, tracker unit	10
Fuse 2 - Battery supply to instruments, tracker unit	5
Fuse 3 - Fuel pump and starter relay	15
Fuse 4 - Cooling fan	20
Fuse 5 - Headlight (dipped beam, high beam and DRL) and horn	10
Fuse 6 - Engine management system	15
Fuse 7 - Spare	10
Fuse 8 - USB socket	5
Fuse 9 - Licence plate light, brake/rear light and position light	5

Speed 400 **from VIN A25051**, Scrambler 400 X **from VIN A19434** and Scrambler 400 XC

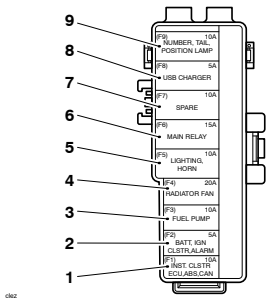

Fuse Box 1

Fuse Number and Circuit Protected	Rating (Amps)
Fuse 1 - Ignition supply to instruments, ABS, immobiliser, tracker unit	10
Fuse 2 - Battery supply to instruments, tracker unit	5
Fuse 3 - Fuel pump	10
Fuse 4 - Cooling fan	20
Fuse 5 - Headlight (dipped beam, high beam and DRL) and horn	10
Fuse 6 - Engine management system	15
Fuse 7 - Spare	10
Fuse 8 - USB socket	5
Fuse 9 - Licence plate light, brake/rear light, position light and starter relay	10

Spare fuses for fuse box 2 are located on the inside of the fuse box and should be replaced if used.

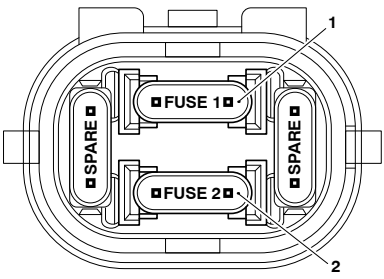

Fuse Box 2

Fuse Number and Circuit Protected	Rating (Amps)
Fuse 1 - ABS pump	15
Fuse 2 - ABS solenoid	10

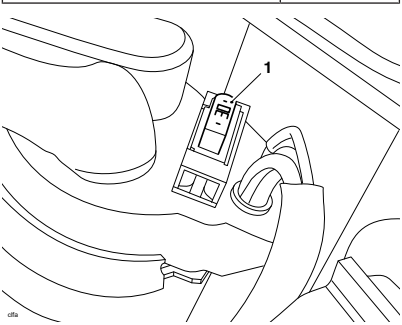

Main Fuse (Starter Solenoid)

Fuse Number and Circuit Protected	Rating (Amps)
Fuse 1 - Main fuse (battery supply to ignition key and other electrical loads)	30

Lights

NOTICE

The use of non-approved bulbs may result in damage to lenses and other lighting unit components.

In addition, the use of bulbs of incorrect wattage may cause the chassis ECM to cut power to affected lighting circuits.

Use genuine Triumph supplied bulbs, as specified in the Triumph Parts Catalogue.

Always have replacement bulbs installed by a competent person with the specialist knowledge and technical understanding of motorcycles, such as an authorised Triumph dealer.

Headlight(s)

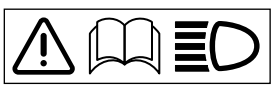

⚠ WARNING

Adjust road speed to suit the visibility and weather conditions in which the motorcycle is being operated.

Make sure that the headlight beam is adjusted to illuminate the road surface sufficiently far ahead, without dazzling oncoming traffic.

An incorrectly adjusted headlight may impair visibility for oncoming traffic, leading to an accident, which could result in serious injury or death.

⚠ WARNING

Never attempt to adjust a headlight beam when the motorcycle is in motion.

Any attempt to adjust a headlight beam when the motorcycle is in motion may lead to loss of motorcycle control.

Failure to follow the advice above could result in serious injury or death.

NOTICE

Do not cover the headlight or lens with any item likely to obstruct air flow to, or prevent heat escaping from, the headlight lens. For example:

- Items of clothing or luggage
- Adhesive tape
- Devices intended to alter or adjust the headlight beam
- Non-genuine headlight lens covers.

Covering the headlight lens during operation will cause the headlight lens to overheat and distort, causing irreparable damage to the headlight assembly.

Damage caused by overheating is not considered a manufacturing defect and will not be covered under warranty.

If the headlight must be covered during use - such as taping of the headlight lens required during closed-course conditions - the headlight must be disconnected.

Condensation

NOTICE

If condensation inside the headlight does not clear, we recommend that the headlight is inspected by a competent person with the specialist knowledge and technical understanding of motorcycles, such as an authorised Triumph dealer.

In certain conditions, condensation may occur inside the headlight.

Condensation may happen while it is raining or after washing the motorcycle.

Condensation inside the headlight will gradually disappear with the headlight on while riding the motorcycle.

Time for evaporation will vary depending on the humidity of the ambient air.

Headlight Adjustment

NOTICE

Check and, if necessary, correct the tyre pressures before adjusting the headlight beam.

NOTICE

Always make sure the handlebars are in the straight ahead position when checking and adjusting the headlight beam.

Speed 400, Scrambler 400 X, Scrambler 400 XC and Tracker 400

- Make sure the handlebars are in the straight ahead position.
- Switch the headlight dipped beam on.
- Loosen the headlight mounting fixings sufficiently to allow restricted movement of the headlight.
- Adjust the position of the headlight to give the required beam setting.
- Tighten the headlight mounting fixings to 9 Nm.

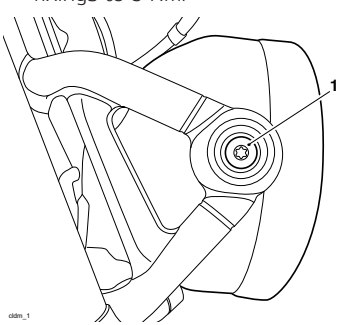

1. **Headlight mounting fixing (Scrambler 400 X shown)**

- Recheck the headlight beam setting. Rectify as required.

Thruxton 400

- Remove the four fixings that fit the fairing outer panel to the front screen.

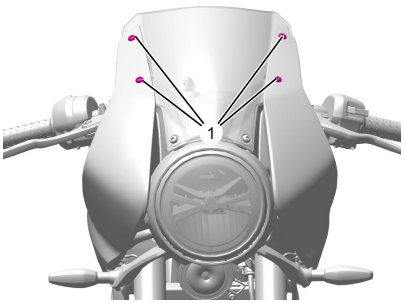

1. Fixing

- Remove the three fixings securing the left and right side outer fairing panels, as shown in the illustrations below.

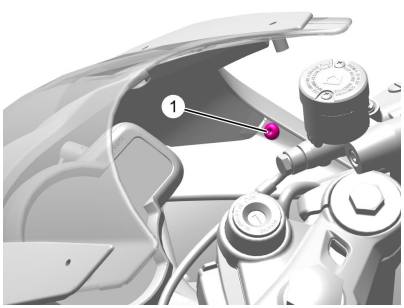

1. Top cover fairing fixing (right side shown)

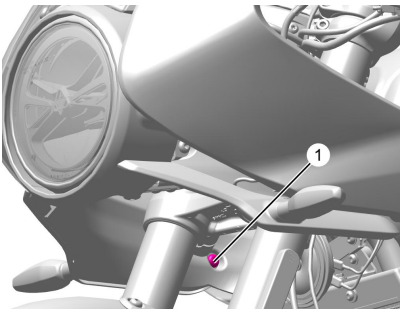

1. Inner cover fairing fixing (right side shown)

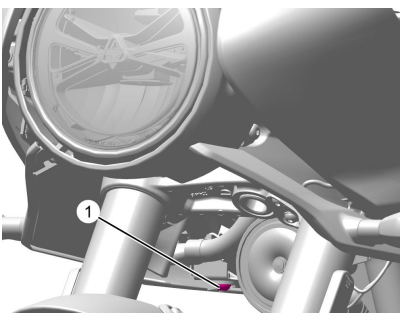

1. Fairing bracket fixing (right side shown)

- Hold the right side outer panel firmly and pull away from the inner fairing housing grommets (leave the grommets in place).

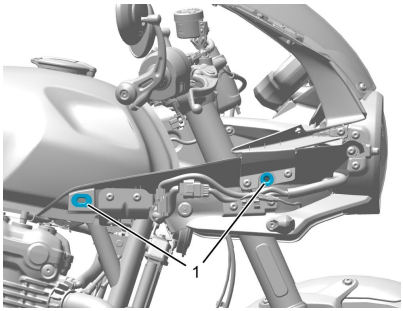

1. Grommet (right side shown)

- Repeat to remove the left side outer fairing panel.
- Loosen the headlight support bracket fixings sufficiently to allow restricted movement of the headlight.

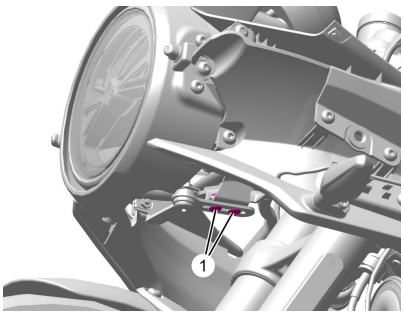

1. Headlight support bracket fixings

- Position the motorcycle on level ground and in an upright position (not on the side stand or centre stand).
- Switch the ignition on and make sure the engine is running.
- Switch the headlight dipped beam on.
- Loosen the side headlight mounting fixings sufficiently to allow restricted movement of the headlight.
- Adjust the position of the headlight to give the required beam setting.
- Tighten the headlight support bracket fixings to 9 Nm.
- Tighten the headlight mounting fixings to 9 Nm.
- Recheck the headlight beam setting. Rectify as required.

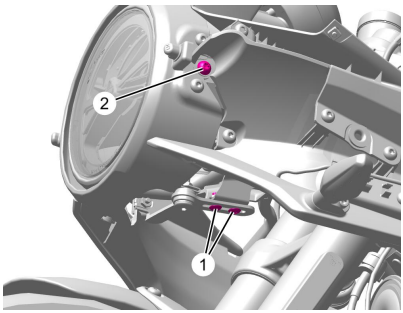

1. Headlight support bracket fixings
2. Headlight mounting fixings

- Align the right side outer panel with the inner fairing housing grommets. Push firmly until the outer fairing panel is fully engaged with the inner fairing grommets.

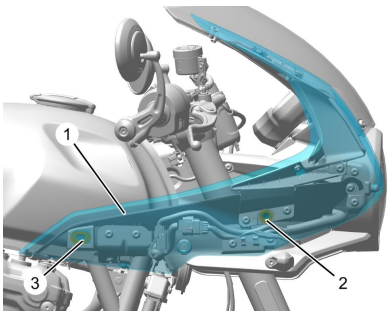

1. **Outer fairing panel (right side shown)**
2. **Grommet**

- Repeat to align the left side outer fairing panel.

- Fit the three fixings to attach the left and right side outer fairing panels, as shown in the illustrations below. Do not fully tighten the fixings at this stage.

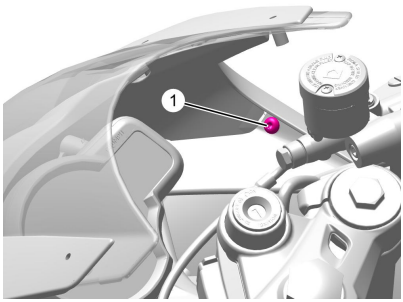

1. **Top cover fairing fixing (right side shown)**

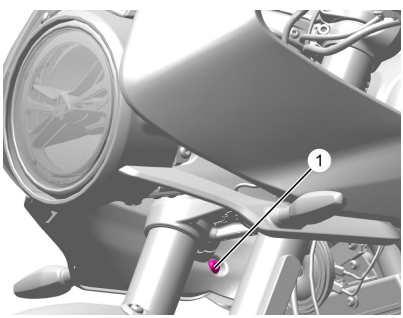

1. **Inner cover fairing fixing (right side shown)**

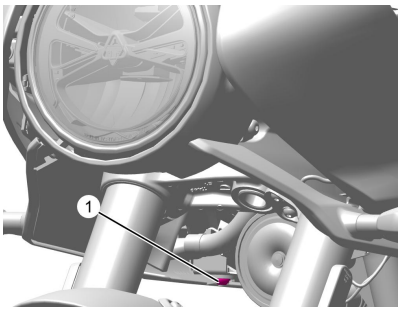

1. **Fairing bracket fixing (right side shown)**

- Fit the four fixings that attach the fairing outer panels to the front screen.

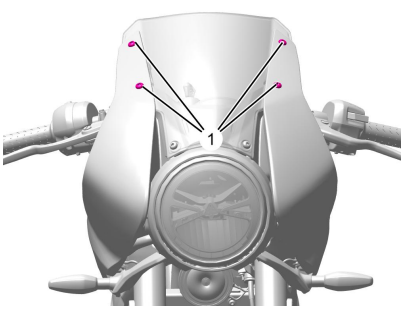

1. **Screen fixing**

- Tighten the fixings in the sequence shown below:
- Fairing bracket fixing, tighten to 4.5 Nm.
- Inner cover fairing fixing, tighten to 2.5 Nm.
- Top cover fairing fixing, tighten to 2.5 Nm.
- Screen fixing, tighten to 2.5 Nm.

Headlight Replacement

The headlight unit is a sealed, maintenance-free LED unit. The headlight unit must be replaced in the event of the failure of the headlight.

Daytime Running Light (DRL) (if fitted)

The Daytime Running Light (DRL) is situated within the headlight assembly and is a sealed, maintenance-free LED unit. The headlight unit must be replaced in the event of the failure of the DRL.

Position Light

The position light unit is a sealed, maintenance-free LED unit.

Rear Light

The rear light unit is a sealed, maintenance-free LED unit. The rear light unit must be replaced in the event of the failure of the rear light.

Direction Indicator Lights

The direction indicator light units are sealed, maintenance-free LED units. A direction indicator light unit must be replaced in the event of the failure of the direction indicator light.

Licence Plate Light

The licence plate light unit is a sealed, maintenance-free LED unit. The licence plate light unit must be replaced in the event of the failure of the licence plate light.

This page intentionally left blank

Table of Contents

Cleaning 180
Preparation for Washing 180
Where to be Careful 181
Washing 181
After Washing 182
Gloss Paintwork Care 182
Matt Paintwork Care 182
Aluminium Items - not Lacquered or Painted 183
Chrome and Stainless Steel Care 183
Black Chrome Care 184
Exhaust System Care 184
Seat Care 185
Windscreen Care (if fitted) 186
Leather Products Care 187
Monsoon/Rainy Season Care 188
Storage 189

CLEANING AND STORAGE

Cleaning

Regular cleaning is an essential part of the maintenance of your motorcycle. If regularly cleaned, the appearance will be preserved for many years.

Cleaning with cold water containing an automotive cleaner is essential at all times, but particularly so after exposure to sea breezes, sea water, dusty or muddy roads and in winter, when roads are treated for ice and snow.

Do not use household detergent, as the use of such products will lead to premature corrosion.

Although, under the terms of your motorcycle warranty, cover is provided against the corrosion of certain items, the owner is expected to observe this reasonable advice, which will safeguard against corrosion and enhance the appearance of the motorcycle.

Preparation for Washing

Before washing, precautions must be taken to keep water off the following places.

Rear opening of the exhausts: Cover with a plastic bag secured with rubber bands.

Clutch and brake levers, switch housings on the handlebar: Cover with plastic bags.

Ignition switch and steering lock: Cover the keyhole (if applicable) with tape.

Remove any items of jewellery such as rings, watches, zips or belt buckles, which may scratch or otherwise damage painted or polished surfaces.

Use separate cleaning sponges or cleaning cloths for washing painted/ polished surfaces and chassis areas. Chassis areas (such as wheels and under mudguards) will be exposed to more abrasive road grime and dust, which may scratch painted or polished surfaces, if the same sponge or cleaning cloths are used.

Where to be Careful

NOTICE

Do not use high pressure spray washers or steam cleaners.

Use of high pressure spray washers and steam cleaners may damage seals, and cause water and steam to be forced into bearings and other components causing premature wear from corrosion and loss of lubrication.

NOTICE

Do not spray any water at all near the air intake duct.

The air intake duct is located under the rider's seat, under the fuel tank or near the steering head.

Any water sprayed in this area could enter the airbox and engine, causing damage to both items.

Do not get water near the following places:

- Air and any intake duct
- Any visible electrical components
- Brake cylinders and brake calipers
- Handlebar switch housings
- Headstock bearings
- Instruments
- Oil filler cap
- Rear of headlights
- Seats
- Suspension seals and bearings
- Under the fuel tank
- Wheel bearings.

Washing

To wash the motorcycle, do the following:

- Make sure that the motorcycle engine is cold.
- Prepare a mixture of clean, cold water and mild automotive cleaner or low alkaline soap.
- Do not use a highly alkaline soap as commonly found at commercial car washes because it will leave a residue on painted surfaces and may also cause water spotting.
- Wash the motorcycle with a sponge or soft cloth.
- Do not use abrasive scouring pads or steel wool. They will damage the finish.
- Rinse the motorcycle thoroughly with clean, cold water.

Do not use the following:

- Do not use high pressure spray washers or steam cleaners.
- Do not use compressed air to dry the motorcycle.

After Washing

⚠ WARNING

Never wax or lubricate the brake discs.

Always clean the brake disc with a proprietary brand of oil-free brake disc cleaner.

Waxed or lubricated brake discs may lead to loss of motorcycle control which could result in serious injury or death.

After washing the motorcycle, do the following:

- Remove the plastic bags and tape, and clear the air intakes.
- Lubricate the pivots, bolts and nuts.
- Test the brakes before motorcycle operation.
- Use a dry cloth or chamois leather to absorb water residue. Do not allow water to stand on the motorcycle as this will lead to corrosion.
- Start the engine and run it for 5 minutes. Make sure that there is adequate ventilation for the exhaust fumes.

Gloss Paintwork Care

Gloss paintwork should be washed and dried as described previously, then protected using a high quality automotive wax polish. Always follow the manufacturer's instructions and repeat regularly to maintain your motorcycle's appearance.

Matt Paintwork Care

Matt paintwork requires no greater care than that already recommended for gloss paintwork. Note the following:

- Do not use any polish or wax on matt paintwork.
- Do not try and polish out scratches.

Aluminium Items - not Lacquered or Painted

Items such as brake and clutch levers, wheels, engine covers, engine cooling fins, upper and lower yokes and throttle bodies on some models must be correctly cleaned to preserve their appearance. Please contact your dealer if you are not sure which components on your motorcycle are aluminium parts not protected by paint or lacquer, and for guidance on how to clean those items.

Use a proprietary brand of aluminium cleaner that does not contain abrasive or caustic elements.

Clean aluminium items regularly, in particular after use in inclement weather, where the components must be hand washed and dried each time the machine is used.

Warranty claims due to inadequate maintenance will not be allowed.

Chrome and Stainless Steel Care

All chrome and stainless steel parts of your motorcycle must be cleaned regularly to avoid a deterioration of its appearance.

Washing

Wash as previously described.

Drying

Dry the chrome and stainless steel parts as far as possible with a soft cloth or chamois leather.

Protecting

NOTICE

The use of products that contain silicone will cause discolouration of the chrome and stainless steel parts, and must not be used.

The use of abrasive cleaning products will damage the finish, and must not be used.

When the chrome and stainless steel is dry, apply a suitable proprietary chrome cleaner on to the surface, following the manufacturer's instructions.

It is recommended that regular protection be applied to the motorcycle as this will both protect and enhance its appearance.

Black Chrome Care

Items such as headlight bowls and mirrors on some models must be correctly cleaned to preserve their appearance. Please contact your dealer if you are not sure which components on your motorcycle are black chrome parts. Maintain the appearance of black chrome items by rubbing a small amount of light oil into the surface.

Exhaust System Care

All parts of the exhaust system of your motorcycle must be cleaned regularly to avoid a deterioration of its appearance. These instructions can be applied to chrome, brushed stainless steel and carbon fibre components. Matt painted exhaust systems should be cleaned as above, noting the care instructions in the Matt Paintwork section previously.

The exhaust system must be cool before washing to prevent water spotting.

Washing

Wash as previously described.

Make sure that no soap or water enters the exhausts.

Drying

Dry the exhaust system as far as possible with a soft cloth or chamois leather. Do not run the engine to dry the system or spotting will occur.

Protecting

NOTICE

The use of products that contain silicone will cause discolouration of the chrome and stainless steel parts, and must not be used.

The use of abrasive cleaning products will damage the finish, and must not be used.

When the exhaust system is dry, apply a suitable proprietary motorcycle protection spray onto the surface, following the manufacturer's instructions.

It is recommended that regular protection be applied to the system as this will both protect and enhance the system's appearance.

Seat Care

NOTICE

Do not use chemicals or high pressure spray washers to clean the seat.

Using chemicals or high pressure spray washers may damage the seat cover.

To help maintain its appearance, clean the seat using a sponge or cleaning cloth with soap and water.

Windscreen Care (if fitted)

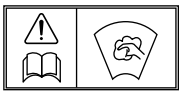

⚠ WARNING

Never attempt to clean the windscreen while riding the motorcycle.

Removal of the rider's hands from the handlebars while riding the motorcycle will diminish the ability of the rider to maintain the control of the motorcycle.

Attempting to clean the windscreen while riding the motorcycle may lead to loss of motorcycle control, which could result in serious injury or death.

NOTICE

Corrosive chemicals, such as battery acid, will damage the windscreen. Never allow corrosive chemicals to come into contact with the windscreen.

NOTICE

Products such as window cleaning fluids, insect remover, rain repellent, scouring compounds, petrol or strong solvents such as alcohol, acetone, carbon tetrachloride, will damage the windscreen.

Never allow these products to come into contact with the windscreen.

Clean the windscreen with a solution of mild soap or detergent and clean cold water.

After cleaning, rinse well and then dry with a soft, lint-free cloth.

If the transparency of the windscreen is reduced by scratches or oxidation, which cannot be removed, the windscreen must be replaced.

Leather Products Care

We recommend that the leather products are periodically cleaned with a damp cloth and allowed to dry naturally at room temperature. This will maintain the appearance of the leather and ensure the long life of the product.

The Triumph leather product is a natural product and lack of care can result in damage and permanent wear.

Follow these simple instructions to prolong the life of the leather product:

- Do not use household cleaning products, bleach, detergents containing bleach or any kind of solvent to clean the leather product.
- Do not immerse the leather product in water.
- Avoid direct heat from fires and radiators, which can dry out and distort the leather.
- Do not leave the leather product in direct sunlight for prolonged periods of time.
- Do not dry the leather product by applying direct heat to it at any time.
- If the leather product does get wet, absorb any excess water with a soft, clean cloth then leave the leather product to dry naturally at room temperature.
- Avoid exposure of the leather product to high levels of salt, for example sea/salt water or road surfaces that have been treated during the winter for ice and snow.
- If exposure to salt is unavoidable, clean the leather product immediately after each exposure using a damp cloth, then leave the leather product to dry naturally at room temperature.
- Gently clean any minor marks with a damp cloth then leave the leather product to dry naturally at room temperature.
- Place the leather product in a fabric bag or cardboard box to protect it when in storage. Do not use a plastic bag.

Monsoon/Rainy Season Care

During the Monsoon/Rainy season, extra care is required in order to obtain consistent performance of your motorcycle.

Always observe the following:

- Make sure that the motorcycle is parked in a covered area. If a covered area is not available, make sure to put a suitable waterproof breathable cover over the motorcycle.
- Make sure that the tyres are in a good condition.
- Check and, if necessary, correct the tyre pressures.

NOTICE

If the drive chain gets contaminated by mud, we recommend that the drive chain is cleaned and lubricated before riding.

- The drive chain should be cleaned and lubricated every 200 miles (300 km) using Triumph Performance chain lubricant.

⚠ WARNING

When using the motorcycle on loose, wet or muddy roads, braking effectiveness will be reduced by dust, mud or moisture collecting on the brakes.

Always brake earlier in these conditions to make sure that brake surfaces are cleaned by the braking action.

Riding the motorcycle with brakes contaminated with dust, mud or moisture may lead to loss of motorcycle control, which could result in serious injury or death.

- Check that the front and rear brakes are functioning correctly.
- Make sure that you wear appropriate waterproof clothing suitable for motorcycles.
- Never ride the motorcycle through floods as water may enter the engine. Water entering the engine may cause engine damage. Damage caused by water entering the engine is not covered by the motorcycle warranty, as it is not due to a manufacturing defect.
- If the motorcycle is parked and water level rises around the motorcycle, do not try to start the engine. The motorcycle should be inspected for water ingress before starting the engine. Inspections and repairs must be completed by a competent person with the specialist knowledge and technical understanding of motorcycles, such as an authorised Triumph dealer.

Storage

Preparation for Storage

To prepare the motorcycle for storage, do the following:

- Clean and dry the entire vehicle thoroughly.
- Fill the fuel tank with the correct grade of unleaded fuel and add a suitable fuel stabiliser (if available), following the fuel stabiliser manufacturer's instructions.

⚠ WARNING

Petrol is extremely flammable and can be explosive under certain conditions.

If parking inside a garage or other structure, be sure it is well ventilated and the motorcycle is not close to any source of flame or sparks. This includes any appliance with a pilot light.

Failure to follow the above advice may cause a fire resulting in damage to property, serious injury or death.

- Remove the spark plug from the cylinder and put several drops (5 ml) of engine oil into the cylinder. Cover the spark plug holes with a piece of cloth or rag. With the engine stop switch in the RUN position, push the starter button for a few seconds to coat the cylinder walls with oil. Install the spark plug, tightening to 17 Nm.
- Change the engine oil and filter (see page 122).
- Check and if necessary correct the tyre pressures (see page 158).
- Set the motorcycle on a stand so that both wheels are raised off the ground. (If this cannot be done, put boards under the front and rear wheels to keep dampness away from the tyres.)
- Spray rust inhibiting oil (there are a host of products on the market and your dealer will be able to offer you local advice) on all unpainted metal surfaces to prevent rusting. Prevent oil from getting on rubber parts, brake discs or in the brake calipers.

- Make sure the cooling system is filled with a 50% mixture of coolant (noting that OAT coolant, as supplied by Triumph, is pre-mixed and requires no dilution) and distilled water solution (see page 126).
- Remove the battery, and store it where it will not be exposed to direct sunlight, moisture, or freezing temperatures. During storage it should be given a slow charge (one Ampere or less) about once every two weeks (see Battery Charging).
- Store the motorcycle in a cool, dry area, away from sunlight, and with a minimum daily temperature variation.
- Put a suitable breathable cover over the motorcycle to keep dust and dirt from collecting on it. Avoid using plastic or similar non-breathable, coated materials that restrict air flow and allow heat and moisture to accumulate.

Preparation after Storage

To prepare the motorcycle to be ridden after storage, do the following:

- Install the battery (if removed) (see page 166).
- If the motorcycle has been stored for more than four months, change the engine oil (see page 122).
- Check all the points listed in the Daily Safety Checks section.
- Before starting the engine, remove the spark plug from the cylinder.
- Crank the engine on the starter motor several times until the oil pressure light goes out.
- Replace the spark plug, tightening to 17 Nm, and start the engine.
- Check and if necessary correct the tyre pressures (see page 158).
- Check and if necessary adjust the drive chain tension (see page 134).
- Clean the entire vehicle thoroughly.
- Check the brakes for correct operation.
- Test ride the motorcycle at low speeds.

Table of Contents

Triumph Warranty Terms and Conditions - All Except America and Canada..... 192
Conditions and Exclusions - All Except America and Canada 193
Triumph Overseas..... 195
Caring for your Motorcycle..... 196

Triumph Warranty Terms and Conditions - All Except America and Canada

Thank you for choosing a Triumph motorcycle. This motorcycle is the product of Triumph's use of proven engineering, exhaustive testing, and continuous striving for superior reliability, safety, and performance.

This section of the Owner's Handbook includes details of the warranty and other useful information concerning your motorcycle.

Make sure that all your owner information is entered in the Triumph Motorcycle Service Handbook that is provided with the motorcycle.

Maintain maximum protection under warranty by making sure that your motorcycle is serviced in accordance with the recommendations of the scheduled maintenance chart in this Owner's Handbook.

If you should sell your motorcycle, make sure this Owner's Handbook or Quick Start Guide (where supplied with the motorcycle) together with all other relevant documents are passed to the new owner. Please advise the new owner that they can notify Triumph of the change of ownership by contacting their local Triumph dealer.

All new Triumph motorcycles are covered by a comprehensive unlimited mileage warranty, commencing from the date of first registration or the date of sale if the motorcycle remains unregistered. Refer to your motorcycle warranty registration certificate for details of the warranty period.

Within the warranty period, TRIUMPH MOTORCYCLES LIMITED warrant the new Triumph motorcycle detailed in the Motorcycle Service Handbook to be free from any defect in materials used in the manufacture, and/or workmanship at the time of its manufacture.

Any part found to be defective during this period will be repaired or replaced at the discretion of TRIUMPH MOTORCYCLES LIMITED by an authorised Triumph dealer.

Any part replaced under the warranty will be covered for the remaining period of the warranty.

Any parts replaced under warranty must be returned to TRIUMPH MOTORCYCLES LIMITED by the dealer/ distributor and will become the property of Triumph Motorcycles Ltd.

Triumph may, at its discretion make any repairs or replacement of defective parts falling outside the warranty, but such work shall not be deemed to be any admission of liability.

Triumph will bear labour charges for work carried out under the warranty.

The warranty may be transferred to subsequent owners for the balance of the remaining warranty period.

Australia Only

Our goods come with guarantees that cannot be excluded under the Australian Consumer Law. You are entitled to a replacement or refund for a major failure and compensation for any other reasonably foreseeable loss or damage. You are also entitled to have the goods repaired or replaced if goods fail to be of acceptable quality and the failure does not amount to a major failure.

Conditions and Exclusions - All Except America and Canada

- The motorcycle must not have been used for competition, misused[1], inadequately or incorrectly serviced or maintained.
- The motorcycle must have been serviced as detailed in the manufacturers service maintenance schedule, at the intervals specified in the Owner's Handbook and the service log completed accordingly.
- The motorcycle battery is warranted for 12 (twelve) months from the original date of purchase of the motorcycle. After this 12 (twelve) month period, the battery is excluded from the terms of this warranty. The battery supplied with the motorcycle must be provided with sufficient charge to replenish that lost by the operation of the starting mechanism and/or the use of electrical equipment while the engine is not running.

  Refer to the battery section of this handbook for details of required battery maintenance.

The warranty does not cover:

- Defects caused by incorrect adjustment, repair or modification not authorised by TRIUMPH MOTORCYCLES LIMITED.
- Defects caused by the use of parts and accessories not authorised by TRIUMPH MOTORCYCLES LIMITED.
- The cost of removal and replacement of parts and accessories, unless supplied as original equipment, or recommended by TRIUMPH MOTORCYCLES LIMITED.
- The cost of transportation of the motorcycle to or from the authorised Triumph dealer, or expenses incurred while the motorcycle is unable to be ridden due to warranty repairs.
- Normal servicing and normal service items, such as spark plugs, oil and air filters are not covered by this warranty. Similarly, items which are expected to wear as part of their normal function such as tyres, bulbs, chains, brake pads and clutch plates are also excluded, unless there is a manufacturing defect.
- Defects to the front fork oil seals as they are subject to wear and tear, including but not limited to damage caused by stone chips to the inner fork tubes.

[1] Misuse includes any use not in accordance with the recommendations made in the 'how to ride the motorcycle' section of the Owner's Handbook and any use contrary to the warnings given in that same handbook. In addition, misuse will include, but not be limited to any use of the motorcycle which does not constitute normal use.

- Seats, luggage, paint, chrome, polished aluminium items, or trim deterioration or fading caused by normal wear and tear, exposure, or lack of correct maintenance.
- Motorcycles used on a commercial basis.
- Defects which have not been reported to an authorised dealer within ten days of discovery of the defect.
- Motorcycles which have been inadequately lubricated, or for which the wrong fuel or lubricant has been used.
- Damages due to water submersion and/or foreign material ingestion.

Should a warranty claim become necessary, Triumph Motorcycles and its authorised dealers shall not be liable for loss of use, inconvenience, lost time, commercial losses or other incidental or consequential damages.

This warranty shall be governed by and construed in accordance with the laws of England and Wales, save that in the event of any material conflict or inconsistency between such application to this warranty of the laws of England and Wales and local statutory rights that would otherwise be applicable to Triumph customers (dealerships or consumers) purchasing Triumph products in another country, those local statutory rights shall take precedence.

The competent courts of England and Wales shall have primary authority to settle any questions, claims or disputes which may arise under or in connection with this warranty, save that to the extent that any such issue arising requires the consideration and interpretation of applicable local statutory rights applicable to a customer purchasing Triumph products in another country, the customer may seek to take proceedings in any competent court of that country.

Any statement, condition, representation, description, or warranty otherwise contained in any catalogue, advertisement or other publication shall not be construed as enlarging, varying or overriding anything contained herein.

Triumph Motorcycles reserve the right to make alterations or improvements without notification to any model or motorcycle without obligation to do so to motorcycles already sold.

This warranty does not affect your statutory rights.

Triumph Overseas

If you are travelling abroad and require assistance or advice from a Triumph dealer, contact the subsidiary or importer for the country which you are visiting.

Subsidiary offices are listed below.

For an up to date list of authorised Triumph dealers and importers, visit www.triumphmotorcycles.co.uk/dealers.

Subsidiary Offices

Benelux

Triumph Netherlands

Tel: +31 725 41 0311

Email: Benelux@Triumph.co.uk

Brazil

Triumph Motorcycles Brazil Ltda

Tel: +55 11 3010 1010

Email:
sac.triumph@europ-assistance.com.br

China

British Triumph (Shanghai) Trading Co., Ltd.

Tel: +86 21 6140 9180

Email:
aftersales.china@triumphmotorcycles.com

Denmark/Finland/Norway/Sweden

Triumph Motorcycles AB

Tel: +46 8 680 68 00

Fax: +46 8 680 07 85

France

Triumph S.A.

Tel: +33 1 64 62 3838

Fax: +33 1 64 80 5828

Germany/Austria

Triumph Motorrad Deutschland GmbH

Tel: +49 6003 829090

Fax: +49 6003 8290927

Italy

Triumph Motorcycles srl

Tel: +39 02 93 454525

Fax: +39 02 93 582575

Japan

Triumph Motorcycles Japan K.K.

Tel: +81 3 6453 9810

Fax: +81 3 6453 9811

Spain/Portugal

Triumph Motocicletas España, S.L

Tel: +34 91 637 7475

Fax: +34 91 636 1134

Thailand

Triumph Thailand

Tel: +66(0)20170333

Fax: +66(0)20170330

United Kingdom/Éire

Triumph Motorcycles Ltd

Tel: +44 1455 45 5012

Fax: +44 1455 45 2211

USA/Canada

Triumph Motorcycles (America) Ltd

Tel: +1 678 854 2010

Fax: +1 678 854 8740

Caring for your Motorcycle

Triumph Motorcycles have taken great care in the selection of materials, plating and painting techniques so as to provide its customers with a quality cosmetic appearance allied to durability. However, motorcycles are often used in hostile environmental conditions and in these circumstances it is essential that the motorcycle is washed, dried and lost lubricity replaced to prevent discolouration particularly of plated and unplated metallic surfaces. Your dealer can provide further information and advice if required. Ultimately the appearance of your motorcycle will very much depend on the care it receives.

For further information in regards to caring for your motorcycle, refer to the Cleaning and Storage section of this Owner's Handbook.

Table of Contents

Speed 400 198
Scrambler 400 X 203
Scrambler 400 XC 208
Thruxton 400 213
Tracker 400 218

Speed 400

Dimensions, Weights and Performance
A list of model specific dimensions, weights and performance figures is available from your authorised Triumph dealer, or on the Internet at www.triumphmotorcycles.co.uk.

Payload	Speed 400
Maximum payload (rider, passenger, luggage and accessories)	174 kg (383 lb)

Engine	Speed 400
Engine configuration	Single cylinder four valve DOHC
Arrangement	Transverse, single cylinder
Displacement	398 cc
Bore x stroke	89 x 64 mm
Compression ratio	12.0:1
Starting system	Electric starter

Lubrication	Speed 400
Lubrication system	For crank chamber: Dry sump For rest of the engine: Wet sump and forced lubrication with pump driven oil delivery (Oil enters in crank chamber and it is continuously evacuated by using additional pump)
Engine Oil Capacities:	
Oil capacity (dry fill)	2.25 litres
Oil capacity (wet fill including oil filter)	2 litres
Oil capacity (wet fill excluding oil filter)	1.8 litres

Cooling System	Speed 400
Coolant type	Orange - Triumph D2053 OAT coolant (premixed) Green - HP THANDA RAJA B OAT coolant
Coolant ratio	50/50
Cooling system capacity	1.2 litres
Thermostat opening temperature	88° C

Fuel System	Speed 400
Fuel injection system	Electronic
Injector type	Single point injection into induction manifold
Fuel pump type	Submerged
Fuel pressure (nominal)	3.5 bar (350 kpa/50.8 lb/in²)

Fuel	Speed 400
Fuel type	Unleaded, 91 RON (U.S. 87 CLC/AKI)
Fuel tank capacity	13 litres
Low fuel indicator light	3 litres remaining

Ignition	Speed 400
Ignition system	Digital inductive
Electronic rev limiter	9,500 rpm
Spark plug type	Bosch VR6NEU
Spark plug gap	0.9 mm +0.00/-0.1 mm

SPECIFICATIONS

Transmission	Speed 400
Transmission type	6 speed, constant mesh
Clutch type	Multi plate wet clutch operated via LHS hand lever
Final drive chain	520 Series X-ring chain
Number of links	104
Chain length (20 links)	323.7 mm
Primary drive ratio	2.839:1 (88/31)
Final drive ratio	3.36:1 (43/15)
Gear ratios - 1st gear	2.83:1 (34/12)
Gear ratios - 2nd gear	1.93:1 (29/15)
Gear ratios - 3rd gear	1.42:1 (27/19)
Gear ratios - 4th gear	1.14:1 (24/21)
Gear ratios - 5th gear	0.96:1 (22/23)
Gear ratios - 6th gear	0.84:1 (21/25)

⚠ WARNING

Use the recommended tyres ONLY in the combinations listed in the approved Tyre Selector at www.triumphtechnicalinformation.com/tyres.

Do not mix tyres from different manufacturers or mix different specification tyres from the same manufacturers.

Using/mixing tyres may affect the handling, stability, braking and traction control (if fitted) functions of the motorcycle.

Failure to follow the advice above may lead to loss of motorcycle control, which could result in serious injury or death.

Approved Tyres
A list of approved tyres specific to these models is available from your authorised Triumph dealer, or on the Internet at www.triumph.co.uk.

Tyres	Speed 400
Tyre Sizes:	
Front tyre size	110/70 ZR17 54W
Rear tyre size	150/60 ZR17 66W
Tyre Pressures (Cold):	
Front tyre pressure	1.79 bar (179 kpa/26.0 lb/in²)
Rear tyre pressure	2.28 bar (228 kpa/33.0 lb/in²)

Electrical Equipment	Speed 400
Battery type	ETZ-9 or YTX9-BS
Battery rating	12 Volt, 8 Ah
Alternator rating	14 Volt, 18.5 Amp at 4,000 rpm
Front position light	LED
Headlight	LED
Rear/brake light	LED
Licence plate light	LED
Direction indicator lights	LED

SPECIFICATIONS

Torque Figures	Speed 400
Front left cover finisher fixings	7 Nm
Front left engine cover fixings	11 Nm
Engine oil drain plug	13 Nm
Evacuation strainer plug	10 Nm
Oil filter cover fixings	11 Nm
Clutch cable lower lock nut	15 Nm
Rear wheel spindle nut	98 Nm
Drive chain adjuster lock nut	11 Nm
Drive chain guard fixings	9 Nm
Battery terminal fixings	4.5 Nm
Spark plug	17 Nm

Fluids and Lubricants	Speed 400
Bearings and pivots	Triumph Performance RG2 grease (NLGI 2)
Brake fluid	Triumph Performance DOT 4 brake fluid
Coolant	Orange - Triumph D2053 OAT coolant (premixed) Green - HP THANDA RAJA B OAT coolant
Drive chain	Triumph Performance chain lubricant
Engine oil	Fully synthetic 10W/50 motorcycle engine oil that meets specification API SN (or higher) and JASO MA2. Semi-synthetic engine oil must not be used. Triumph Performance fully synthetic engine oil is recommended

Scrambler 400 X

Dimensions, Weights and Performance
A list of model specific dimensions, weights and performance figures is available from your authorised Triumph dealer, or on the Internet at www.triumph.co.uk.

Payload	Scrambler 400 X
Maximum payload (rider, passenger, luggage and accessories)	174 kg (383 lb)

Engine	Scrambler 400 X
Engine configuration	Single cylinder four valve DOHC
Arrangement	Transverse, single cylinder
Displacement	398 cc
Bore x stroke	89 x 64 mm
Compression ratio	12.0:1
Starting system	Electric starter

Lubrication	Scrambler 400 X
Lubrication system	For crank chamber: Dry sump For rest of the engine: Wet sump and forced lubrication with pump driven oil delivery (Oil enters in crank chamber and it is continuously evacuated by using additional pump)
Engine Oil Capacities:	
Oil capacity (dry fill)	2.25 litres
Oil capacity (wet fill including oil filter)	2 litres
Oil capacity (wet fill excluding oil filter)	1.8 litres

SPECIFICATIONS

Cooling System	Scrambler 400 X
Coolant type	Orange - Triumph D2053 OAT coolant (premixed) Green - HP THANDA RAJA B OAT coolant
Coolant ratio	50/50
Cooling system capacity	1.2 litres
Thermostat opening temperature	88° C

Fuel System	Scrambler 400 X
Fuel injection system	Electronic
Injector type	Single point injection into induction manifold
Fuel pump type	Submerged
Fuel pressure (nominal)	3.5 bar (350 kpa/50.8 lb/in²)

Fuel	Scrambler 400 X
Fuel type	Unleaded, 91 RON (U.S. 87 CLC/AKI)
Fuel tank capacity	13 litres
Low fuel indicator light	3 litres remaining

Ignition	Scrambler 400 X
Ignition system	Digital inductive
Electronic rev limiter	9,500 rpm
Spark plug type	Bosch VR6NEU
Spark plug gap	0.9 mm +0.00/-0.1 mm

Transmission	Scrambler 400 X
Transmission type	6 speed, constant mesh
Clutch type	Multi plate wet clutch operated via LHS hand lever
Final drive chain	520 Series X-ring chain
Number of links	106
Chain length (20 links)	323.7 mm
Primary drive ratio	2.839:1 (88/31)
Final drive ratio	3.07:1 (43/14)
Gear ratios - 1st gear	2.83:1 (34/12)
Gear ratios - 2nd gear	1.93:1 (29/15)
Gear ratios - 3rd gear	1.42:1 (27/19)
Gear ratios - 4th gear	1.14:1 (24/21)
Gear ratios - 5th gear	0.96:1 (22/23)
Gear ratios - 6th gear	0.84:1 (21/25)

⚠ WARNING

Use the recommended tyres ONLY in the combinations listed in the approved Tyre Selector at www.triumph.co.uk.

Do not mix tyres from different manufacturers or mix different specification tyres from the same manufacturers.

Using/mixing tyres may affect the handling, stability, braking and traction control (if fitted) functions of the motorcycle.

Failure to follow the advice above may lead to loss of motorcycle control which could result in serious injury or death.

SPECIFICATIONS

Approved Tyres
A list of approved tyres specific to these models is available from your authorised Triumph dealer, or on the Internet at www.triumph.co.uk.

Tyres	Scrambler 400 X
Tyre Sizes:	
Front tyre size	100/90-19 57H
Rear tyre size	140/80 R17 69H
Tyre Pressures (Cold):	
Front tyre pressure	1.79 bar (179 kpa/26.0 lb/in²)
Rear tyre pressure	2.28 bar (228 kpa/33.0 lb/in²)

Electrical Equipment	Scrambler 400 X
Battery type	ETZ-9 or YTX9-BS
Battery rating	12 Volt, 8 Ah
Alternator rating	14 Volt, 18.5 Amp at 4,000 rpm
Front position light	LED
Headlight	LED
Rear/brake light	LED
Licence plate light	LED
Direction indicator lights	LED

Torque Figures	Scrambler 400 X
Rider seat fixings	4.5 Nm
Front left cover finisher fixings	7 Nm
Front left engine cover fixings	11 Nm
Engine oil drain plug	13 Nm
Evacuation strainer plug	10 Nm
Oil filter cover fixings	11 Nm
Clutch cable lower lock nut	15 Nm
Rear wheel spindle nut	98 Nm
Drive chain adjuster lock nut	11 Nm
Drive chain guard fixings	9 Nm
Battery terminal fixings	4.5 Nm
Spark plug	17 Nm

Fluids and Lubricants	Scrambler 400 X
Bearings and pivots	Triumph Performance RG2 grease (NLGI 2)
Brake fluid	Triumph Performance DOT 4 brake fluid
Coolant	Orange - Triumph D2053 OAT coolant (premixed) Green - HP THANDA RAJA B OAT coolant
Drive chain	Triumph Performance chain lubricant
Engine oil	Fully synthetic 10W/50 motorcycle engine oil which meets specification API SN (or higher) and JASO MA2. Semi synthetic engine oil must not be used. Triumph Performance fully synthetic engine oil is recommended

Scrambler 400 XC

Dimensions, Weights and Performance
A list of model specific dimensions, weights and performance figures is available from your authorised Triumph dealer, or on the Internet at www.triumph.co.uk.

Payload	Scrambler 400 XC
Maximum payload (rider, passenger, luggage and accessories)	174 kg (383 lb)

Engine	Scrambler 400 XC
Engine configuration	Single cylinder four valve DOHC
Arrangement	Transverse, single cylinder
Displacement	398 cc
Bore x stroke	89 x 64 mm
Compression ratio	12.0:1
Starting system	Electric starter

Lubrication	Scrambler 400 XC
Lubrication system	For crank chamber: Dry sump For rest of the engine: Wet sump and forced lubrication with pump driven oil delivery (Oil enters in crank chamber and it is continuously evacuated by using additional pump) (Oil enters in crank chamber and it is continuously evacuated by using additional pump)
Engine Oil Capacities:	
Oil capacity (dry fill)	2.25 litres
Oil capacity (wet fill including oil filter)	2 litres
Oil capacity (wet fill excluding oil filter)	1.8 litres

Cooling System	Scrambler 400 XC
Coolant type	Orange - Triumph D2053 OAT coolant (premixed) Green - HP THANDA RAJA B OAT coolant
Coolant ratio	50/50
Cooling system capacity	1.2 litres
Thermostat opening temperature	88° C

Fuel System	Scrambler 400 XC
Fuel injection system	Electronic
Injector type	Single point injection into induction manifold
Fuel pump type	Submerged
Fuel pressure (nominal)	3.5 bar (350 kpa/50.8 lb/in²)

Fuel	Scrambler 400 XC
Fuel type	Unleaded, 91 RON (U.S. 87 CLC/AKI)
Fuel tank capacity	13 litres
Low fuel indicator light	3 litres remaining

Ignition	Scrambler 400 XC
Ignition system	Digital inductive
Electronic rev limiter	9,500 rpm
Spark plug type	Bosch VR6NEU
Spark plug gap	0.9 mm +0.00/-0.1 mm

SPECIFICATIONS

Transmission	Scrambler 400 XC
Transmission type	6 speed, constant mesh
Clutch type	Multi plate wet clutch operated via LHS hand lever
Final drive chain	520 Series X-ring chain
Number of links	106
Chain length (20 links)	323.7 mm
Primary drive ratio	2.839:1 (88/31)
Final drive ratio	3.07:1 (43/14)
Gear ratios - 1st gear	2.83:1 (34/12)
Gear ratios - 2nd gear	1.93:1 (29/15)
Gear ratios - 3rd gear	1.42:1 (27/19)
Gear ratios - 4th gear	1.14:1 (24/21)
Gear ratios - 5th gear	0.96:1 (22/23)
Gear ratios - 6th gear	0.84:1 (21/25)

⚠ WARNING

Use the recommended tyres ONLY in the combinations listed in the approved Tyre Selector at www.triumph.co.uk.

Do not mix tyres from different manufacturers or mix different specification tyres from the same manufacturers.

Using/mixing tyres may affect the handling, stability, braking and traction control (if fitted) functions of the motorcycle.

Failure to follow the advice above may lead to loss of motorcycle control which could result in serious injury or death.

Approved Tyres
A list of approved tyres specific to these models is available from your authorised Triumph dealer, or on the Internet at www.triumph.co.uk.

Tyres	Scrambler 400 XC
Tyre Sizes:	
Front tyre size	100/90-19 57H
Rear tyre size	140/80 R17 69H
Tyre Pressures (Cold):	
Front tyre pressure	1.79 bar (179 kpa/26.0 lb/in²)
Rear tyre pressure	2.28 bar (228 kpa/33.0 lb/in²)

Electrical Equipment	Scrambler 400 XC
Battery type	ETZ-9 or YTX9-BS
Battery rating	12 Volt, 8 Ah
Alternator rating	14 Volt, 18.5 Amp at 4,000 rpm
Front position light	LED
Headlight	LED
Rear/brake light	LED
Licence plate light	LED
Direction indicator lights	LED

SPECIFICATIONS

Torque Figures	Scrambler 400 XC
Rider seat fixings	4.5 Nm
Front left cover finisher fixings	7 Nm
Front left engine cover fixings	11 Nm
Engine oil drain plug	13 Nm
Evacuation strainer plug	10 Nm
Oil filter cover fixings	11 Nm
Clutch cable lower lock nut	15 Nm
Rear wheel spindle lock nut	98 Nm
Drive chain adjuster lock nut	11 Nm
Drive chain guard fixings	9 Nm
Battery terminal fixings	4.5 Nm
Spark plug	17 Nm

Fluids and Lubricants	Scrambler 400 XC
Bearings and pivots	Triumph Performance RG2 grease (NLGI 2)
Brake fluid	Triumph Performance DOT 4 brake fluid
Coolant	Orange - Triumph D2053 OAT coolant (premixed) Green - HP THANDA RAJA B OAT coolant
Drive chain	Triumph Performance chain lubricant
Engine oil	Fully synthetic 10W/50 motorcycle engine oil which meets specification API SN (or higher) and JASO MA2. Semi synthetic engine oil must not be used. Triumph Performance fully synthetic engine oil is recommended

Thruxton 400

Dimensions, Weights and Performance
A list of model specific dimensions, weights and performance figures is available from your authorised Triumph dealer, or on the Internet at www.triumphmotorcycles.co.uk.

Payload	Thruxton 400
Maximum payload (rider, passenger, luggage and accessories)	TBA

Engine	Thruxton 400
Engine configuration	Single cylinder four valve DOHC
Arrangement	Transverse, single cylinder
Displacement	398 cc
Bore x stroke	89 x 64 mm
Compression ratio	12.0:1
Starting system	Electric starter

Lubrication	Thruxton 400
Lubrication system	For crank chamber: Dry sump For rest of the engine: Wet sump and forced lubrication with pump driven oil delivery (Oil enters in crank chamber and it is continuously evacuated by using additional pump)
Engine Oil Capacities:	
Oil capacity (dry fill)	2.25 litres
Oil capacity (wet fill including oil filter)	2 litres
Oil capacity (wet fill excluding oil filter)	1.8 litres

SPECIFICATIONS

Cooling System	Thruxton 400
Coolant type	Orange - Triumph D2053 OAT coolant (premixed) Green - HP THANDA RAJA B OAT coolant
Coolant ratio	50/50
Cooling system capacity	1.2 litres
Thermostat opening temperature	88° C

Fuel System	Thruxton 400
Fuel injection system	Electronic
Injector type	Single point injection into induction manifold
Fuel pump type	Submerged
Fuel pressure (nominal)	3.5 bar (350 kpa/50.8 lb/in²)

Fuel	Thruxton 400
Fuel type	Unleaded, 91 RON (U.S. 87 CLC/AKI)
Fuel tank capacity	13 litres
Low fuel indicator light	3 litres remaining

Ignition	Thruxton 400
Ignition system	Digital inductive
Electronic rev limiter	10,500 rpm
Spark plug type	Bosch VR6NEU
Spark plug gap	0.9 mm +0.00/-0.1 mm

Transmission	Thruxton 400
Transmission type	6 speed, constant mesh
Clutch type	Multi plate wet clutch operated via LHS hand lever
Final drive chain	Chain
Number of links	104
Chain length (20 links)	323.7 mm
Primary drive ratio	2.839:1 (88/31)
Final drive ratio	3.36:1 (43/15)
Gear ratios - 1st gear	2.83:1 (34/12)
Gear ratios - 2nd gear	1.93:1 (29/15)
Gear ratios - 3rd gear	1.42:1 (27/19)
Gear ratios - 4th gear	1.14:1 (24/21)
Gear ratios - 5th gear	0.96:1 (22/23)
Gear ratios - 6th gear	0.84:1 (21/25)

⚠ WARNING

Use the recommended tyres ONLY in the combinations listed in the approved Tyre Selector at www.triumphtechnicalinformation.com/tyres.

Do not mix tyres from different manufacturers or mix different specification tyres from the same manufacturers.

Using/mixing tyres may affect the handling, stability, braking and traction control (if fitted) functions of the motorcycle.

Failure to follow the advice above may lead to loss of motorcycle control, which could result in serious injury or death.

SPECIFICATIONS

Approved Tyres
A list of approved tyres specific to these models is available from your authorised Triumph dealer, or on the Internet at www.triumph.co.uk.

Tyres	Thruxton 400
Tyre Sizes:	
Front tyre size	110/70 ZR17 54W
Rear tyre size	150/60 ZR17 66W
Tyre Pressures (Cold):	
Front tyre pressure	1.79 bar (179 kpa/26.0 lb/in²)
Rear tyre pressure	2.28 bar (228 kpa/33.0 lb/in²)

Electrical Equipment	Thruxton 400
Battery type	ETZ-9 or YTX9-BS
Battery rating	12 Volt, 8 Ah
Alternator rating	14 Volt, 18.5 Amp at 4,000 rpm
Front position light	LED
Headlight	LED
Rear/brake light	LED
Licence plate light	LED
Direction indicator lights	LED

Torque Figures	Thruxton 400
Front left cover finisher fixings	7 Nm
Front left engine cover fixings	11 Nm
Engine oil drain plug	13 Nm
Evacuation strainer plug	11 Nm
Oil filter cover fixings	11 Nm
Clutch cable lower lock nut	15 Nm
Rear wheel spindle nut	98 Nm
Drive chain adjuster lock nut	11 Nm
Drive chain guard fixings	9 Nm
Battery terminal fixings	4.5 Nm
Spark plug	17 Nm

Fluids and Lubricants	Thruxton 400
Bearings and pivots	Triumph Performance RG2 grease (NLGI 2)
Brake fluid	Triumph Performance DOT 4 brake fluid
Coolant	Orange - Triumph D2053 OAT coolant (premixed) Green - HP THANDA RAJA B OAT coolant
Drive chain	Triumph Performance chain lubricant
Engine oil	Fully synthetic, Triumph Performance fully synthetic engine oil is recommended

Tracker 400

Dimensions, Weights and Performance
A list of model specific dimensions, weights and performance figures is available from your authorised Triumph dealer, or on the Internet at www.triumphmotorcycles.co.uk.

Payload	Tracker 400
Maximum payload (rider, passenger, luggage and accessories)	TBA

Engine	Tracker 400
Engine configuration	Single cylinder four valve DOHC
Arrangement	Transverse, single cylinder
Displacement	398 cc
Bore x stroke	89 x 64 mm
Compression ratio	12.0:1
Starting system	Electric starter

Lubrication	Tracker 400
Lubrication system	For crank chamber: Dry sump For rest of the engine: Wet sump and forced lubrication with pump driven oil delivery (Oil enters in crank chamber and it is continuously evacuated by using additional pump)For crank chamber: Dry sump
Engine Oil Capacities:	
Oil capacity (dry fill)	2.25 litres
Oil capacity (wet fill including oil filter)	2 litres
Oil capacity (wet fill excluding oil filter)	1.8 litres

Cooling System	Tracker 400
Coolant type	Orange - Triumph D2053 OAT coolant (premixed) Green - HP THANDA RAJA B OAT coolant
Coolant ratio	50/50
Cooling system capacity	1.2 litres
Thermostat opening temperature	88° C

Fuel System	Tracker 400
Fuel injection system	Electronic
Injector type	Single point injection into induction manifold
Fuel pump type	Submerged
Fuel pressure (nominal)	3.5 bar (350 kpa/50.8 lb/in²)

Fuel	Tracker 400
Fuel type	Unleaded, 91 RON (U.S. 87 CLC/AKI)
Fuel tank capacity	13 litres
Low fuel indicator light	3 litres remaining

Ignition	Tracker 400
Ignition system	Digital inductive
Electronic rev limiter	10,500 rpm
Spark plug type	Bosch VR6NEU
Spark plug gap	0.9 mm +0.00/-0.1 mm

SPECIFICATIONS

Transmission	Tracker 400
Transmission type	6 speed, constant mesh
Clutch type	Multi plate wet clutch operated via LHS hand lever
Final drive chain	520 Series X-ring chain
Number of links	104
Chain length (20 links)	323.7 mm
Primary drive ratio	2.839:1 (88/31)
Final drive ratio	3.36:1 (43/15)
Gear ratios - 1st gear	2.83:1 (34/12)
Gear ratios - 2nd gear	1.93:1 (29/15)
Gear ratios - 3rd gear	1.42:1 (27/19)
Gear ratios - 4th gear	1.14:1 (24/21)
Gear ratios - 5th gear	0.96:1 (22/23)
Gear ratios - 6th gear	0.84:1 (21/25)

⚠ WARNING

Use the recommended tyres ONLY in the combinations listed in the approved Tyre Selector at www.triumphtechnicalinformation.com/tyres.

Do not mix tyres from different manufacturers or mix different specification tyres from the same manufacturers.

Using/mixing tyres may affect the handling, stability, braking and traction control (if fitted) functions of the motorcycle.

Failure to follow the advice above may lead to loss of motorcycle control, which could result in serious injury or death.

Approved Tyres
A list of approved tyres specific to these models is available from your authorised Triumph dealer, or on the Internet at www.triumph.co.uk.

Tyres	Tracker 400
Tyre Sizes:	
Front tyre size	110/70 ZR17 54W
Rear tyre size	150/60 ZR17 66W
Tyre Pressures (Cold):	
Front tyre pressure	1.79 bar (179 kpa/26.0 lb/in²)
Rear tyre pressure	2.28 bar (228 kpa/33.0 lb/in²)

Electrical Equipment	Tracker 400
Battery type	ETZ-9 or YTX9-BS
Battery rating	12 Volt, 8 Ah
Alternator rating	14 Volt, 18.5 Amp at 4,000 rpm
Front position light	LED
Headlight	LED
Rear/brake light	LED
Licence plate light	LED
Direction indicator lights	LED

SPECIFICATIONS

Torque Figures	Tracker 400
Front left cover finisher fixings	7 Nm
Front left engine cover fixings	11 Nm
Engine oil drain plug	13 Nm
Evacuation strainer plug	10 Nm
Oil filter cover fixings	11 Nm
Clutch cable lower lock nut	15 Nm
Rear wheel spindle nut	98 Nm
Drive chain adjuster lock nut	11 Nm
Drive chain guard fixings	9 Nm
Battery terminal fixings	4.5 Nm
Spark plug	17 Nm

Fluids and Lubricants	Tracker 400
Bearings and pivots	Triumph Performance RG2 grease (NLGI 2)
Brake fluid	Triumph Performance DOT 4 brake fluid
Coolant	Orange - Triumph D2053 OAT coolant (premixed) Green - HP THANDA RAJA B OAT coolant
Drive chain	Triumph Performance chain lubricant
Engine oil	Fully synthetic, Triumph Performance fully synthetic engine oil is recommended

A

Accessories, Loading and Passengers 105
Accessories 105
Loading 107
Passengers 108
Anti-Lock Braking System (ABS) 100
Indicator Light 40

B

Bank Angle Indicators 156
Battery 162
Charging 165
Discharge 164
Disposal 164
Installation 166
Maintenance 164
Removal 163
Storage 165
Brakes 139
Anti-Lock Braking System (ABS) 100
Breaking-in New Brake Discs and Pads .. 139
Disc Brake Fluid 143
Front Brake Fluid Adjustment 145
Front Brake Fluid Inspection 144
Front Brake Wear Inspection 140
Light Switches 147
Pad Wear Compensation 139
Rear Brake Fluid Level Adjustment 147
Rear Brake Fluid Level Inspection 146
Rear Brake Fluid Reservoir 146
Rear Brake Wear Inspection 141

C

Cleaning 180
After Washing 182
Aluminium Items - not Lacquered or Painted 183
Black Chrome Care 184
Chrome and Stainless Steel Care 183
Exhaust System Care 184
Gloss Paintwork Care 182
Leather Products Care 187
Matt Paintwork Care 182
Monsoon/Rainy Season Care 188
Preparation for Washing 180
Seat Care 185
Washing 181
Where to be Careful 181
Windscreen Care 186
Clock 46, 52
Clutch 131
Cable Adjustment 131
Inspection 131
Controls 56
Engine Immobiliser 59
Ignition Key 58
Ignition Switch/Steering Lock 57
Left Handlebar Switches 60
Right Handlebar Switches 59
Throttle Control 56
Cooling System 126
Coolant Change 129
Coolant Level Adjustment 128
Coolant Level Inspection 128
Corrosion Inhibitors 127
Radiator and Hoses 129

D

Daily Safety Checks 90
Direction Indicator Lights 177
Drive Chain 132
- Damage Inspection 137
- Free Movement Adjustment 134
- Free Movement Inspection 134
- Lubrication 133
- Sprockets Wear Inspection 138
- Wear Inspection 136, 137

E

Engine
- Moving Off 96
- Starting the Engine 95
- Stopping the Engine 94

Engine Oil 120
- Level Inspection 121
- Oil and Oil Filter Change 122
- Specification and Grade 126

Engine Run/Stop Switch
- RUN Position 60
- STOP Position 59

F

Front Fork Inspection 154
Fuel
- Average Fuel Consumption 48
- Current Fuel Consumption 48
- Filling the Fuel Tank 66
- Fuel Gauge 44
- Fuel Tank Cap 65
- Grade 62
- Range To Empty 49
- Refuelling 64

Fuses 168
- Identification 169
- Location 168

G

Gears
- Changing 96
- Gear Position 45

H

Handbook and Tool Kit
- Handbook 86
- Tool Kit 86

Headlight(s) 172
- Adjustment 173, 174
- Condensation 173
- Daytime Running Lights (DRL) 177
- Replacement 177

High-Speed Operation 102

I

Instruments
- Average Fuel Consumption 48
- Clock 46, 52
- Current Fuel Consumption 48
- Fuel Gauge 44
- Gear Position 45
- Instruments Display 36
- Odometer 43
- Off-Road Mode 51
- Range to Empty 49
- Service 46
- Side Stand 45
- Speedometer 43
- Tachometer 44
- Trip Meter 47
- Triumph Traction Control 49
- Units 53
- Warning Lights 37

L

Left Handlebar Switches
- Daytime Running Lights (DRL) Switch 61
- Direction Indicator Switch 61
- High Beam Switch 61
- Horn Button 61
- SCROLL/SELECT Button 60

Licence Plate Light 177
Lights 172
- Direction Indicator Lights 177
- Headlight Adjustment 173, 174
- Headlight Replacement 177
- Headlight(s) 172
- Licence Plate Light 177
- Position Light 177
- Rear Light 177

M

Maintenance
- Scheduled Maintenance 114

Mirrors
- Bar End Mirrors 148
- Mirror Adjustment 149

Multi-function Display 43

O

Odometer 43
Off-Road
- Off-Road Mode 51
- Off-Road Use 07

P

Parking 101
Parts Identification
..... 20, 21, 22, 23, 24, 25, 26, 27, 28, 29
- Rider View 30, 31, 32

Position Light 177

R

Rear Light 177
Rider View 30, 31, 32
Right Handlebar Switches
- Hazard Warning Light Switch 60
- RUN Position 60
- START Button 60
- STOP Position 59

Running-In 89

S

Safety
- Fuel and Exhaust Fumes 11
- Handlebars and Footrests 15
- Helmet and Clothing 11
- Maintenance and Equipment 12
- Parking 13
- Parts and Accessories 17
- Riding 14

Scheduled Maintenance
- Disposal of Used Fluids 115
- Scheduled Maintenance Table 116

Seats 79
- Care 79, 185
- Passenger Seat Installation 84
- Passenger Seat Removal 81
- Rider's Seat Installation 83
- Rider's Seat Removal 81
- Seat Installation 82, 85
- Seat Lock 79
- Seat Removal 80, 82

Serial Numbers
- Engine Serial Number 33
- Vehicle Identification Number 33

Service 46
Side Panels 70, 71
- Installation 74, 75, 76, 77, 78
- Removal 70, 71, 72, 73

Side Stand 45, 68

Specifications
Cooling System 199, 204, 209, 214, 219
Electrical Equipment 201, 206, 211, 216, 221
Engine 198, 203, 208, 213, 218
Fluids and Lubricants . 202, 207, 212, 217, 222
Fuel 199, 204, 209, 214, 219
Fuel System 199, 204, 209, 214, 219
Ignition 199, 204, 209, 214, 219
Lubrication 198, 203, 208, 213, 218
Payload 198, 203, 208, 213, 218
Torque Figures 202, 207, 212, 217, 222
Transmission 200, 205, 210, 215, 220
Tyres 201, 206, 211, 216, 221
Speedometer 43
Stand
Side Stand 68
Steering Bearings
Inspection 151
Steering/Wheel Bearings 150
Storage
Preparation after Storage 190
Preparation for Storage 189
Suspension
Front Suspension 153
Rear Spring Preload Adjustment 155
Rear Suspension 155
Rear Suspension Settings 155

T

Tachometer 44
Throttle Control 130
Inspection 130
Traction Control (TC) 66
Disable 67
Settings 67
Triumph Traction Control (TTC) Setting 49
Trip Meter 47
Tyres 157, 229
Inflation Pressures 158
Minimum Tread Depth 159
Replacement 159
Tyre Type 157
Wear 158

U

Units 53
Universal Serial Bus (USB) Socket 87

W

Warning Lights
Daytime Running Lights (DRL) (if fitted)... 42
Direction Indicator Light 41
Engine Immobiliser Indicator Light 39
Engine Management System Malfunction Indicator Light (MIL) 37
Hazard Warning Lights 41
High Beam Indicator Light 41
High Coolant Temperature Warning Light 38
Low Fuel Indicator Light 42
Low Oil Pressure Warning Light 38
Neutral Indicator Light 42
Traction Control (TC) Disabled Warning Light 41
Traction Control (TC) Indicator Light 40
Warnings 05
Maintenance 06
Noise Control System 06
Owner's Handbook 03
QR Code 04
Talk to Triumph 07
Triumph Technical Information (TTI) 04
Warning Label Locations 18, 19
Warning Labels 05
Wheel Bearings
Inspection 152
Windscreen
Care 186

This page intentionally left blank

APPROVAL INFORMATION

This section contains approval information that is required to be included in this Owner's Handbook.

Radio Equipment Device EU Directive 2014/53

Triumph motorcycles are equipped with a range of radio equipment devices. These radio equipment devices must comply with the EU Radio Equipment Device Directive 2014/53/EU. The complete text of the EU declaration of conformity for each radio equipment device is available at the following address:

www.triumphmotorcycles.co.uk/public-content/triumph-radio-device-approvals

The table below shows the frequencies and power levels for the radio equipment devices in compliance with the EU Directive 2014/53/EU. The table shows all radio equipment devices used across the Triumph range of motorcycles. Only certain radio equipment devices in the table are applicable to specific motorcycles.

Radio Equipment Device	Frequency Range	Maximum Transmit Power Level	Manufacturer
Immobiliser	Receive Bands: 119 kHz to 135 kHz Transmit Bands: 119 kHz to 135 kHz	-4.7dBμA/m@ 10m	Minda Corporation Ltd Noida, Uttar Pradesh, India

European Radio Equipment Device Statement

Operation of electrical devices fitted to this motorcycle is subject to the following two conditions:

- This device may not cause harmful interference.
- This device must accept any interference received, including interference that may cause undesired operation.

Changes or modifications to the device could void the user's authority to operate the equipment.

Representative within the European Union

Address

Triumph Motocicletas Espana S.L.

C/Cabo Rufino Lazaro

14 - E

28232 - Las Rozas De Madrid

Spain

Canadian Approval

This device contains licence-exempt transmitter(s)/receiver(s) that comply with Innovation, Science and Economic Development Canada's licence-exempt RSS(s).

Operation is subject to the following two conditions:

1. This device may not cause interference.

2. This device must accept any interference, including interference that may cause undesired operation of the device.

Radio frequency radiation exposure information:

This equipment complies with radiation exposure limits set forth for an uncontrolled environment. This equipment should be installed and operated with minimum distance of 20 cm between the radiator and your body.

Tyres

With reference to the Pneumatic Tyres and Tubes for Automotive Vehicles (Quality Control) Order, 2009, Cl. No. 3 (c), it is declared by M/s. Triumph Motorcycles Ltd. that the tyres fitted on this motorcycle meet the requirements of IS 15627: 2005 and comply with the requirements under Central Motor Vehicle Rules (CMVR), 1989.